FED. RD. DIVISION	STATE	PROJECT	TYPE FUNDS
5	OHIO		

15/25

BIG RUN ROAD
TWP. RD. No. 257

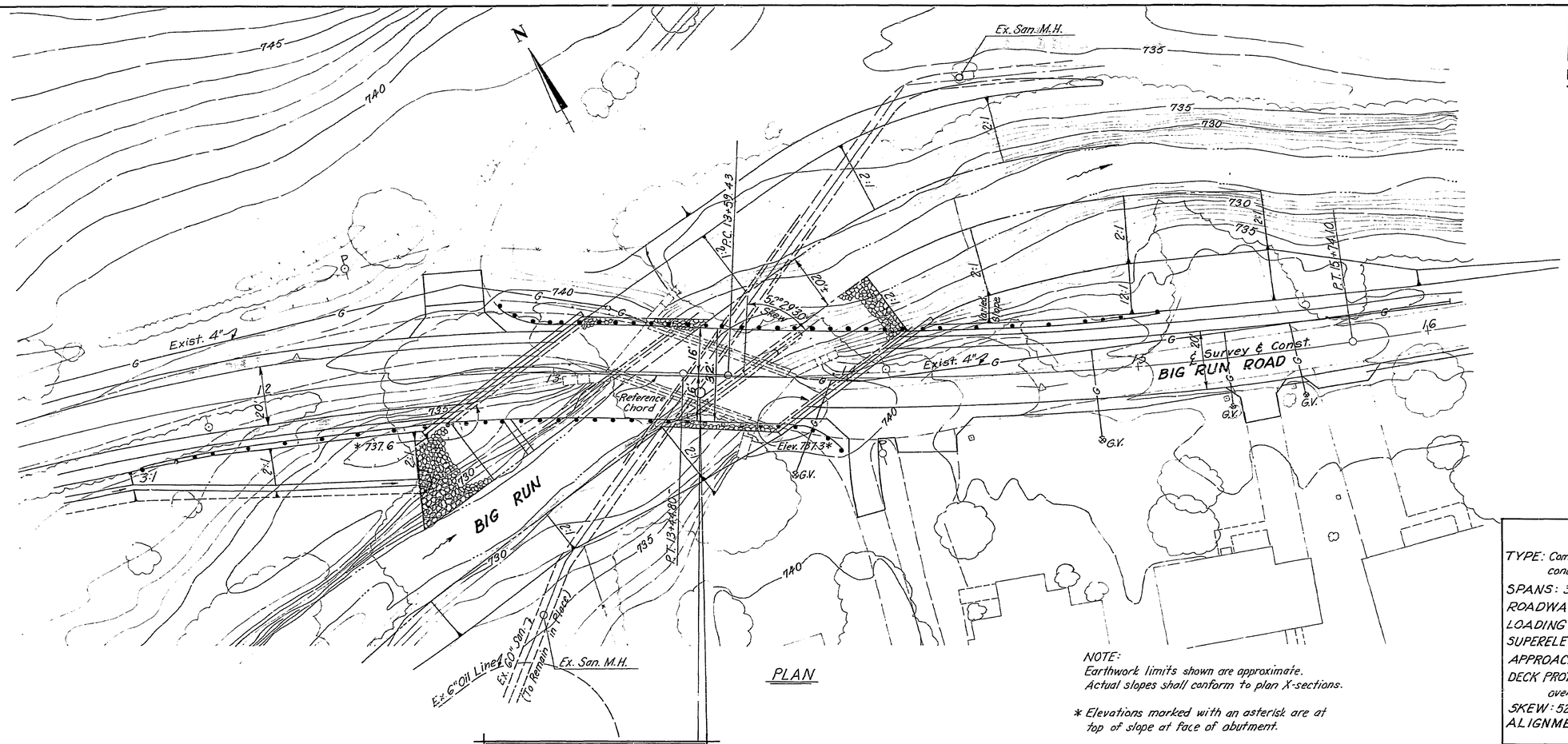

PLAN

NOTE:
Earthwork limits shown are approximate.
Actual slopes shall conform to plan X-sections.

* Elevations marked with an asterisk are at top of slope at face of abutment.

CAUTION:

Extreme care shall be taken during construction operations in the vicinity of the 60" storm sewer. See note sheet 2/10

HYDRAULIC DATA

Drainage Area	11.0 Sq. Mi.
Q_{50}	3,214 c.f.s.
Velocity	6.27 f.p.s.
Q_{100}	3,823 c.f.s.
Velocity	6.83 f.p.s.

Waterway opening below Elev. 738.47: 560 S.F.

HORIZONTAL CURVE DATA

P.I. = 12+14.45	P.I. = 14+67.08
Δ = 19°45'00"	Δ = 10°44'00"
Dc = 7°30'	Dc = 5°00'
R = 763.94'	R = 1145.92'
T = 132.98'	T = 107.65'
Lc = 263.33'	Lc = 214.67'

VERTICAL CURVE DATA

P.V.I.	= 13+60.00
V.C.	= 225'
ELEV.	= 743.00
CORR.	= 1.17'
P.G.	= 741.83
g_1	= +1.52 %
g_2	= -2.64 %

PROPOSED STRUCTURE

TYPE: Composite steel beam (ASTM A588) with reinforced concrete deck and concrete substructure.
SPANS: 36'-3", 43'-0", 34'-9" ℄ Brgs. along ℄ of Bridge
ROADWAY: 32'-0" f/f Guard Rail
LOADING: HS 20-44 (Case III)
SUPERELEVATION: None
APPROACH SLAB: None
DECK PROTECTIVE METHOD: 2½" Asphalt Concrete overlay with Waterproofing Membrane.
SKEW: 52°29'30" Lt. Fwd. with respect to Reference Chord
ALIGNMENT: Dc = 7°30' Curve to Right, Tangent, 5°00' Curve to Left

EXISTING STRUCTURE

TYPE: Steel Girders with floor beams, buckle plate, paving brick deck with asphalt wearing surface Stone substructure.
SPAN: 54'-0"
ROADWAY: 19'-0"± f/f
LOADING: Unknown
ALIGNMENT: Tangent
SKEW: 20°00' Lt. Fwd.
DATE CONSTRUCTED: 1902
Waterway opening below low steel : 540 S.F.

ADT TRAFFIC: Less than 400 VPD.

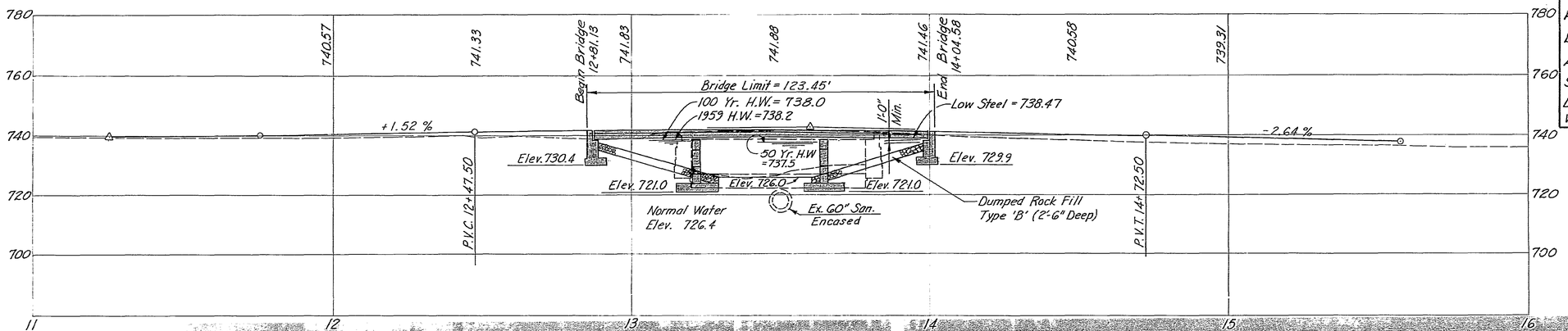

PROFILE ALONG ℄ BIG RUN ROAD

1/10

ALDEN E. STILSON & ASSOCIATES, LIMITED
CONSULTING ENGINEERS
CLEVELAND, OHIO COLUMBUS, OHIO WHEELING, W. VA.

SITE PLAN

BRIDGE NO. FRA-257-0.27
TWP. RD. NO. 257 (BIG RUN RD.) OVER SCIOTO BIG RUN CR.
FRANKLIN COUNTY STA. 12+81.13 to STA. 14+04.58

DESIGNED	DRAWN	TRACED	CHECKED	REVIEWED	DATE	REVISED
MEM	MEM	LEO	CJK	JEV	1/8/81	

BRUNING 44-560 33583

0290 010 SITE PLAN FRA-257-0027 1981 0150 010

FED. RD. DIVISION	STATE	PROJECT	TYPE FUNDS
5	OHIO		

16/25

BIG RUN ROAD
TWP. RD. No. 257

STANDARD DRAWING REFERENCES

DESCRIPTION	DWG. NO. SHT.	DATE
DEEP BEAM BRIDGE GUARD RAIL	DBR-2-73	4-10-73

OHIO DEPARTMENT OF TRANSPORTATION
SUPPLEMENTAL SPECIFICATION REFERENCES

DESCRIPTION	NO.	DATE
CONCRETE CURING AND PROTECTIVE MEMBRANE	836	3-12-75

DESIGN SPECIFICATIONS

THIS STRUCTURE CONFORMS TO THE 'STANDARD SPECIFICATIONS FOR HIGHWAY BRIDGES' ADOPTED BY THE AMERICAN ASSOCIATION OF STATE HIGHWAY AND TRANSPORTATION OFFICIALS, 1977 INCLUDING THE 1978 INTERIM SPECIFICATIONS AND THE OHIO 'SUPPLEMENT' TO THESE SPECIFICATIONS.

SHEAR CONNECTORS

AMERICAN WELDING SOCIETY, STRUCTURAL WELDING CODE AWS D1.1-79 PART F.

DESIGN DATA

DESIGN LOADING - HS20-44 CASE III
CONCRETE CLASS C - COMPRESSIVE STRENGTH 4000 PSI
STRUCTURAL STEEL - ASTM A588, UNIT STRESS 27,000 PSI

REINFORCING STEEL- ASTM A 615, A616 OR A617-GRADE 60
MINIMUM YIELD STRENGTH 60,000 PSI
HIGH STRENGTH BOLT - ASTM A325 (TYPE 3)
CONCRETE CLASS S - COMPRESSIVE STRENGTH 4500 PSI

CONSTRUCTION AND MATERIAL SPECIFICATIONS

STATE OF OHIO, DEPARTMENT OF HIGHWAYS, DATED JANUARY 1, 1979.

DECK PROTECTIVE METHOD

TYPE D WATERPROOFING AND ASPHALT CONCRETE OVERLAY.

REMOVAL OF EXISTING STRUCTURE

WHEN NO LONGER NEEDED TO MAINTAIN TRAFFIC THE EXISTING SUPERSTRUCTURE, ABUTMENTS, AND CONCRETE WALL SHALL BE REMOVED AS PER ITEM 202, TO 1 FOOT BELOW EXISTING GROUND ELEVATION OR THE PROPOSED GRADE WHICHEVER IS LOWER. ABUTMENT STONES SHALL BE CAREFULLY REMOVED AND PILED ALONG THE RIGHT-OF-WAY FOR SALVAGE BY THE FRANKLIN COUNTY'S FORCES.

SUITABLE CONCRETE MASONRY SHALL BE PLACED AS BANK PROTECTION AS DIRECTED BY THE ENGINEER.

EXTREME CARE SHOULD BE TAKEN NOT TO DISTURB THE EXISTING SANITARY SEWER PIPE AND ITS FOUNDATION. ANY DEBRIS THAT MAY FALL INTO THE STREAM BED SHALL BE REMOVED IMMEDIATELY.

FOUNDATION BEARING PRESSURE

ABUTMENT AND PIER FOOTINGS ARE DESIGNED FOR A MAXIMUM BEARING PRESSURE OF 1.5 TONS PER SQ. FT.

UTILITY LINES

ALL EXPENSE INVOLVED IN RELOCATING AND INSTALLING THE AFFECTED UTILITY LINES SHALL BE BORNE BY THE OWNERS. THE CONTRACTOR AND OWNERS ARE REQUESTED TO COOPERATE BY ARRANGING THEIR WORK IN SUCH A MANNER THAT INCONVENIENCE TO EITHER WOULD BE HELD TO A MINIMUM.

MAINTENANCE OF TRAFFIC

SEE ROADWAY GENERAL NOTES.

FABRICATION CERTIFICATION

FABRICATION CERTIFICATION AS SPECIFIED IN 501.04 IS NOT REQUIRED.

SILICON COATING OF CONCRETE SURFACE

TO PREVENT STAINING OF THE CONCRETE FROM THE OXIDATION PRODUCTS OF THE WEATHERING STEEL. THE FOLLOWING AREAS SHALL BE TREATED WITH A LIQUID SILICON COATING. THE ABUTMENT FACES FROM IMMEDIATELY BELOW THE GIRDER SEATS TO APPROXIMATELY 18 INCHES BELOW THE FINISHED GROUND LINE. THE ENTIRE PIER FROM IMMEDIATELY BELOW THE GIRDER SEATS TO APPROXIMATELY 18 INCHES BELOW THE FINISHED GROUND LINE. THE SEALANT SHALL BE "THOROCLEAR 777" (5 PERCENT SILICON) OR APPROVED EQUAL AND SHALL BE APPLIED BY BRUSHING. PAYMENT IS INCLUDED WITH THE APPROPRIATE ITEM 511.

PROTECTION OF EX. 60" SANITARY TRUNK SEWER

THE CONTRACTOR SHALL USE EXTREME CARE WHILE WORKING IN THE VICINITY OF THE EXISTING 60" SANITARY SEWER WHICH IS UNDER THE CHANNEL AND THE EXISTING STRUCTURE. USE OF HEAVY EQUIPMENT OVER OR ADJACENT TO THE EXISTING SEWER SHALL BE DONE IN SUCH A MANNER AS TO PREVENT DAMAGE TO THE SEWER, AND SHOULD ANY DAMAGE OCCUR, THE CONTRACTOR SHALL BE FINANCIALLY RESPONSIBLE FOR ANY REQUIRED REPAIR WORK.

ITEM	TOTAL	UNIT	DESCRIPTION	ABUTS	PIERS	SUPER	GENERAL		AS BUILT	
202	LUMP	SUM	STRUCTURE REMOVED				LUMP			
403	15	C.Y.	ASPHALT CONCRETE			15				
404	14	C.Y.	ASPHALT CONCRETE			14				
503	LUMP	SUM	COFFERDAMS, CRIBS AND SHEETING				LUMP			
503	426	C.Y.	UNCLASSIFIED EXCAVATION	325	101					
509	49,367	LB	REINFORCING STEEL, GRADE 60	9464	15686	24217				
511	107	C.Y.	CLASS S CONCRETE, SUPERSTRUCTURE			107				
511	69	C.Y.	CLASS C CONCRETE, PIERS ABOVE FOOTINGS		69					
511	139	C.Y.	CLASS C CONCRETE, ABUTMENTS ABOVE FOOTINGS	139						
511	107	C.Y.	CLASS C CONCRETE, FOOTINGS	65	42					
512	7	S.Y.	TYPE B WATERPROOFING	7						
512	383	S.Y.	TYPE D WATERPROOFING			383				
513	71137	LB	STRUCTURAL STEEL			71137				
513	1440	EACH	WELDED STUD SHEAR CONNECTORS			1440				
517	248.51	L.F.	RAILING (DEEP BEAM RAIL WITH STEEL POSTS AND BOLTS)			248.51				
518	82	C.Y.	POROUS BACKFILL	82						
518	80	L.F.	6 INCH PERFORATED, HELICAL CMP, 707.01	80						
518	119	L.F.	6 INCH NON-PERFORATED, HELICAL CMP, INCLUDING SPECIALS, 707.01	119						
SPECIAL	270	L.F.	DRIP STRIP			270				
SPECIAL	48	S.Y.	SILANE TREATMENT APPLICATION 150			48				

2/10

ALDEN E. STILSON & ASSOCIATES, LIMITED
CONSULTING ENGINEERS
CLEVELAND, OHIO COLUMBUS, OHIO WHEELING, W. VA.

GENERAL NOTES AND
ESTIMATED QUANTITIES
BRIDGE NO. FRA-257-0.27
TWP. RD. NO. 257 (BIG RUN RD.) OVER
SCIOTO BIG RUN CR.

FRANKLIN COUNTY STA. 12+81.13 to STA. 14+04.58

DESIGNED	DRAWN	TRACED	CHECKED	REVIEWED	DATE	REVISED
CJK			MEM	JEV	1/5/81	

0290 010 GEN. NOTES & QUANTITIES 0027 1981 0162 010

BRUNING 44-560 33983

FED. RD. DIVISION	STATE	PROJECT	TYPE FUNDS
5	OHIO		

17
25

BIG RUN ROAD
TWP. RD. № 257

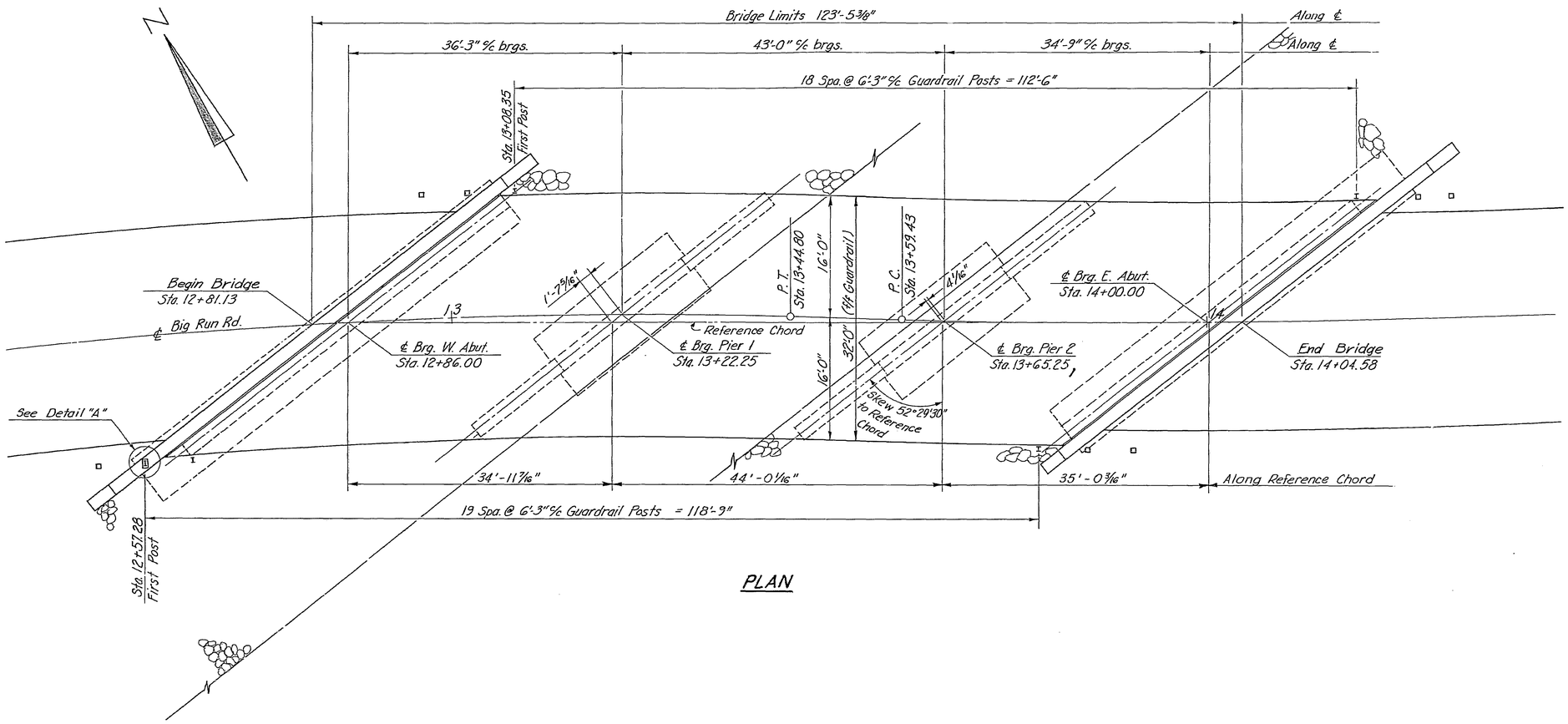

PLAN

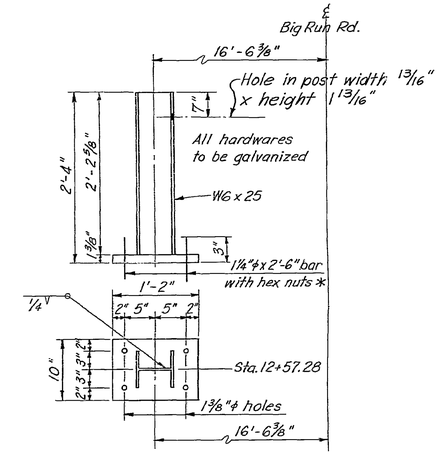

DETAIL "A"
* May use self-drilling anchors
See detail GR-1

NOTE:
For dumped rock fill quantities see Highway Plans Sheet 7/25

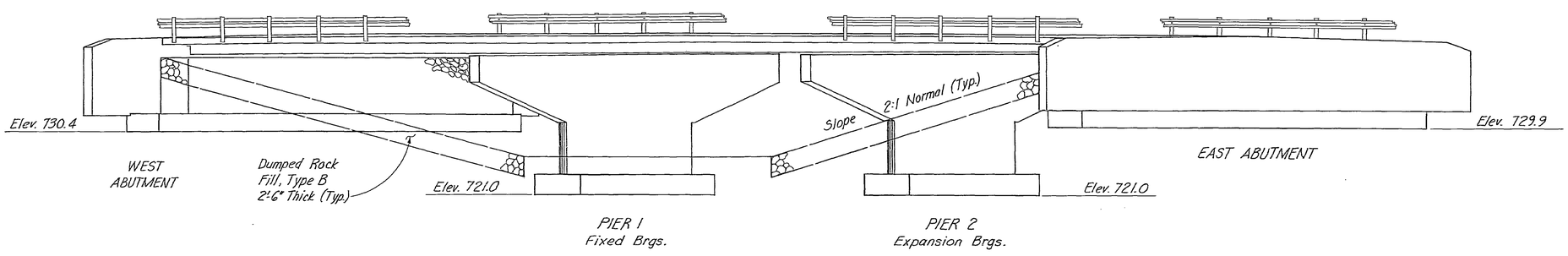

ELEVATION

3 1/10

ALDEN E. STILSON & ASSOCIATES, LIMITED
CONSULTING ENGINEERS
CLEVELAND, OHIO COLUMBUS, OHIO WHEELING, W. VA.

GENERAL PLAN & ELEVATION

BRIDGE NO. FRA-257-0.27
TWP. RD. NO. 257 (BIG RUN RD.) OVER
SCIOTO BIG RUN CR.

FRANKLIN COUNTY

STA. 12+81.13 to
STA. 14+04.58

DESIGNED	DRAWN	TRACED	CHECKED	REVIEWED	DATE	REVISED
MEM	MEM	LEO	CJK	JEV	1/5/81	

BRUNING-AA-560 33583

0290 010 GEN. PLAN & ELEVATION 0027 1981 0170 010

FED. RD. DIVISION	STATE	PROJECT	TYPE FUNDS
5	OHIO		

18
25

BIG RUN ROAD
TWP. RD. № 257

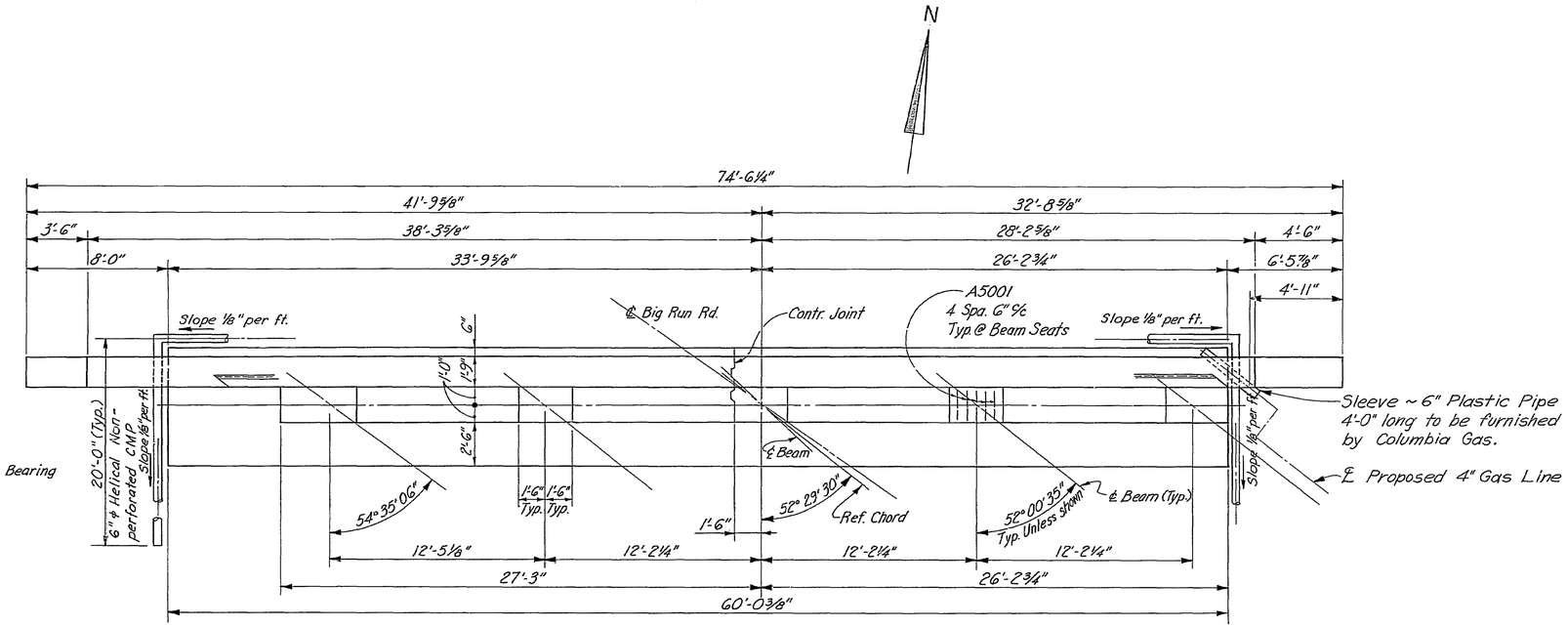

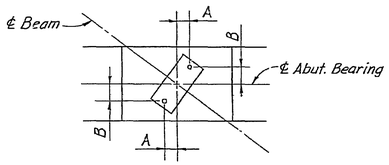

ANCHOR BOLT LOCATION DETAIL

	W. ABUT.		E. ABUT.
Dim.	Beam 1-4	Beam 5	Beam 1-5
A	4⅜	4 1/16	4⅜
B	5 9/16	5¾	5 9/16

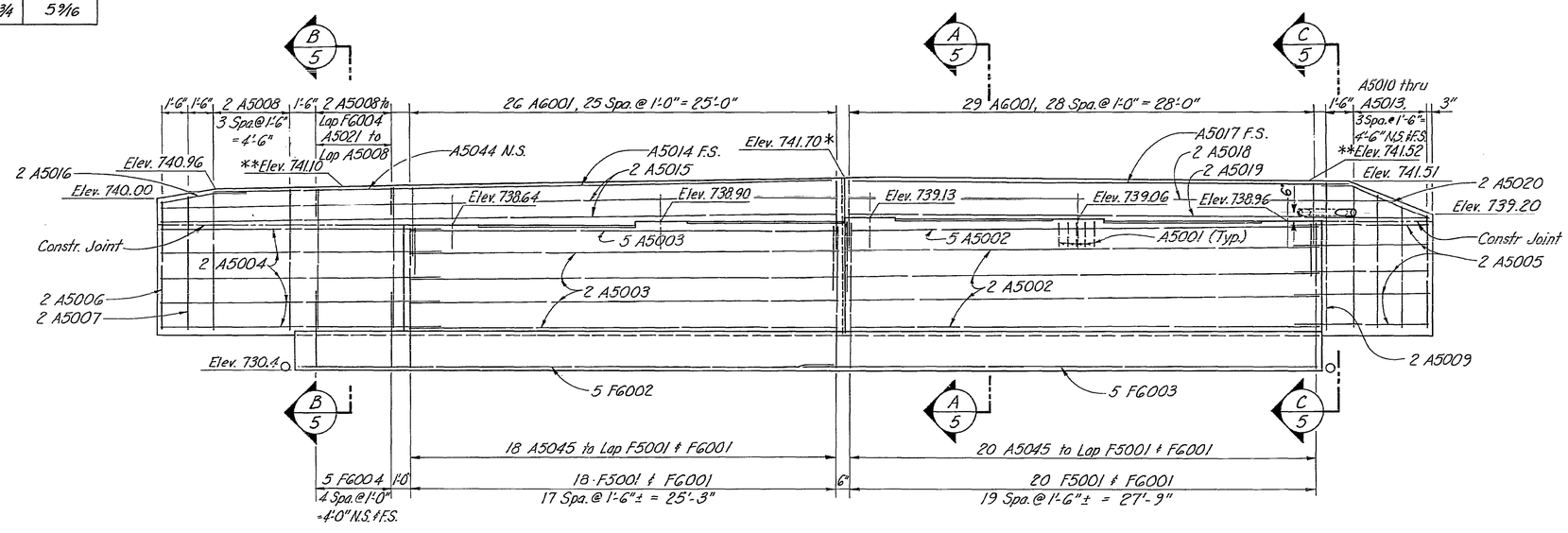

NOTES

Bridge Seat Reinforcing: Reinforcing steel in the vicinity of the bridge seat shall be accurately placed to avoid interference with the drilling of bearing anchor holes or the pre-setting of bearing anchors.

Bearing Anchors: At the option of the Contractor, bearing anchors (or formed holes), located and supported by templates, may be cast in place.

Typical reinforcing bar lap lengths:
No. 5 Bars = 19" lap
No. 6 Bars = 23" lap
No. 8 Bars = 30" lap

In reinforcing bar call-outs:
N.S. indicates Near Side
F.S. indicates Far Side

Footing reinforcement shall have a minimum cover of 3" at all surfaces.

Porous Backfill, 1'-6" thick, shall extend up to the plane of the subgrade and laterally to the ends of the wingwalls.

Backwall Concrete: In addition to the provisions of 511.08, backwall concrete above the bridge seat shall not be placed until after the deck concrete in the span adjacent to the abutment has been placed.

*Elevations shown thus are to the top of the 2" edge bar.

** Elevations shown thus are to the top of the 2" edge bar at the end of the bar.

For Sections see sheet 5/10

4/10

ALDEN E. STILSON & ASSOCIATES, LIMITED
CONSULTING ENGINEERS
CLEVELAND, OHIO COLUMBUS, OHIO WHEELING, W. VA.

WEST ABUTMENT DETAILS

BRIDGE NO. FRA-257-0.27
TWP. RD. NO. 257 (BIG RUN RD.) OVER SCIOTO BIG RUN CR.

FRANKLIN COUNTY

STA. 12+81.13 to STA. 14+04.58

DESIGNED	DRAWN	TRACED	CHECKED	REVIEWED	DATE	REVISED
MEM	MEM	LEO	CJK	JEV	1/5/81	

0290 010 WEST ABUTMENT 0027 1981 0180 010

BRUNING 44.960 33983

FED. RD. DIVISION	STATE	PROJECT	TYPE FUNDS
5	OHIO		

19 / 25

BIG RUN ROAD
TWP. RD. № 257

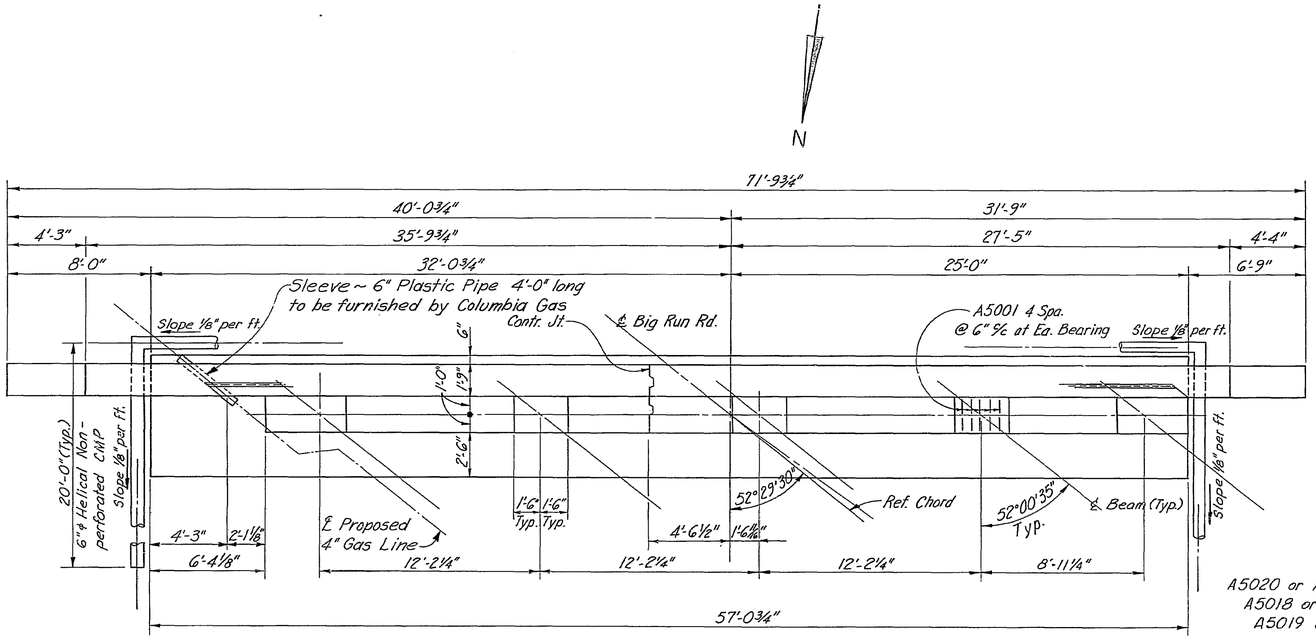

PLAN

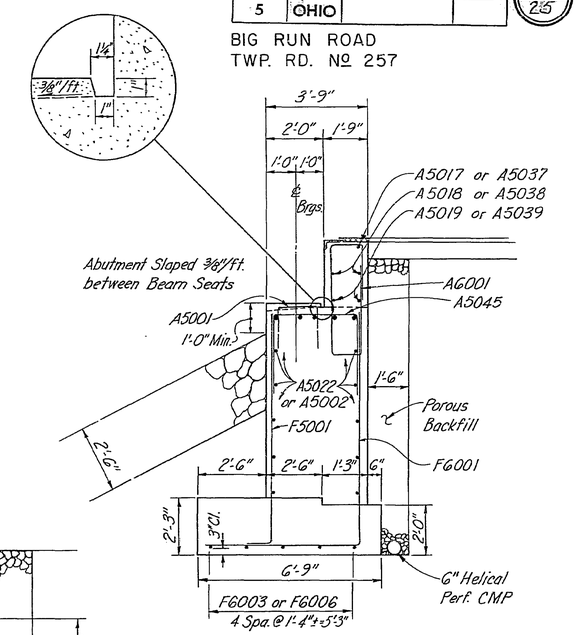

SECTION A-A

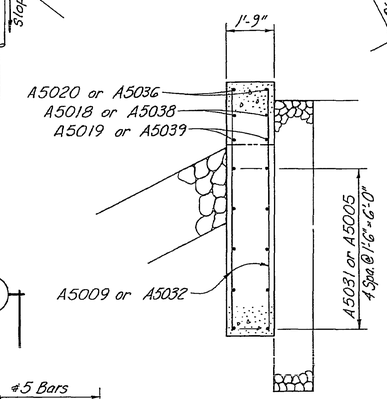

SECTION C-C

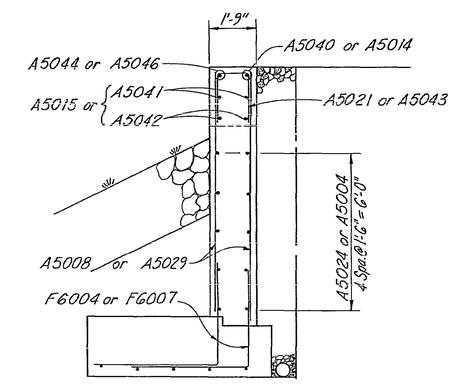

SECTION B-B

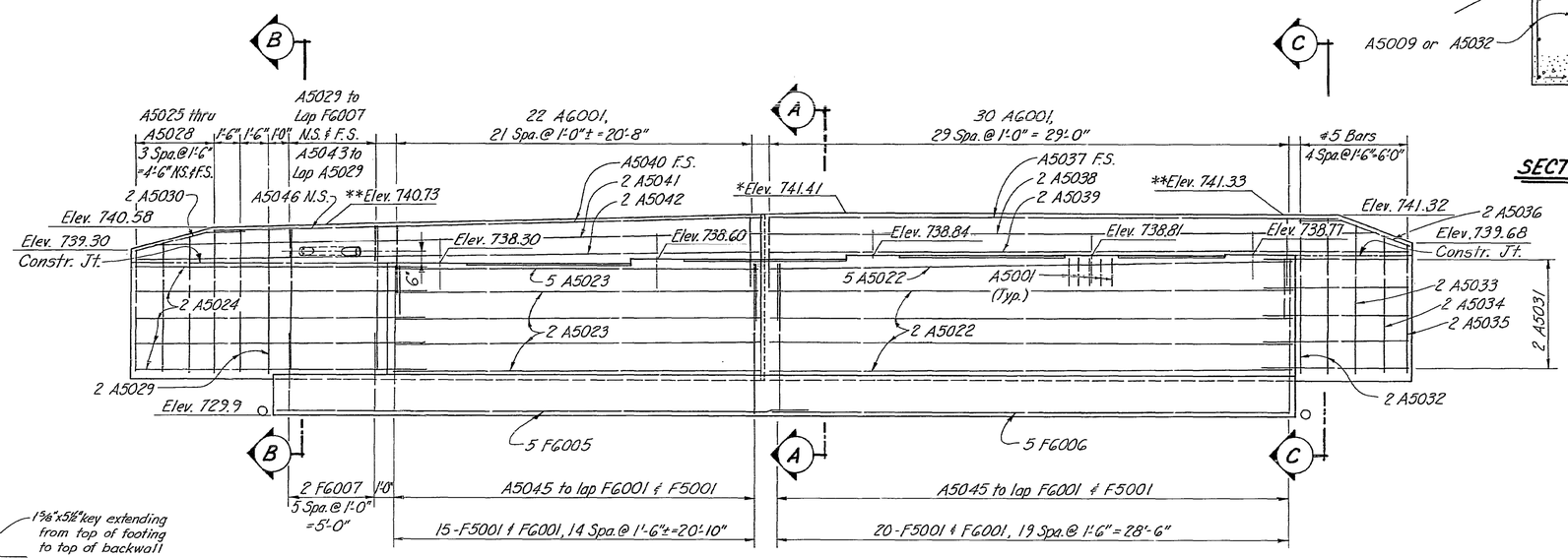

ELEVATION

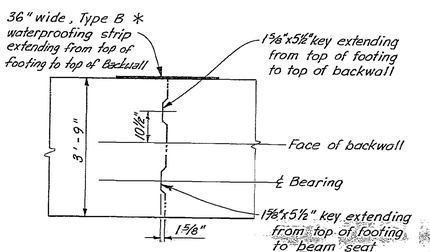

CONTRACTION JOINT

* In lieu of Type B waterproofing, W.R. Meadows Sealtight Melnar Waterproofing Membrane or other approved alternate preformed membrane may be used. Installation shall be as recommended by the manufacturer. Preformed membranes shall have a minimum width of 16" ± and be centered on the joint.

NOTES:
In reinforcing bar call-outs:
F.S. indicates Far Side
N.S. indicates Near Side

For additional notes see sheet 4/10

5 / 10

ALDEN E. STILSON & ASSOCIATES, LIMITED
CONSULTING ENGINEERS
CLEVELAND, OHIO COLUMBUS, OHIO WHEELING, W. VA.

EAST ABUTMENT DETAILS

BRIDGE NO. FRA-257-0.27
TWP. RD. NO. 257 (BIG RUN RD.) OVER SCIOTO BIG RUN CR.

FRANKLIN COUNTY

STA. 12+81.13 to STA. 14+04.58

DESIGNED	DRAWN	TRACED	CHECKED	REVIEWED	DATE	REVISED
MEM	MEM	LEO	CJK	JEV	1/5/81	

BRUNING 44-560 33583

0290 010 EAST ABUTMENT 0027 1981 0190 010

FED. RD. DIVISION	STATE	PROJECT	TYPE FUNDS
5	OHIO		

20/25

BIG RUN ROAD
TWP. RD. № 257

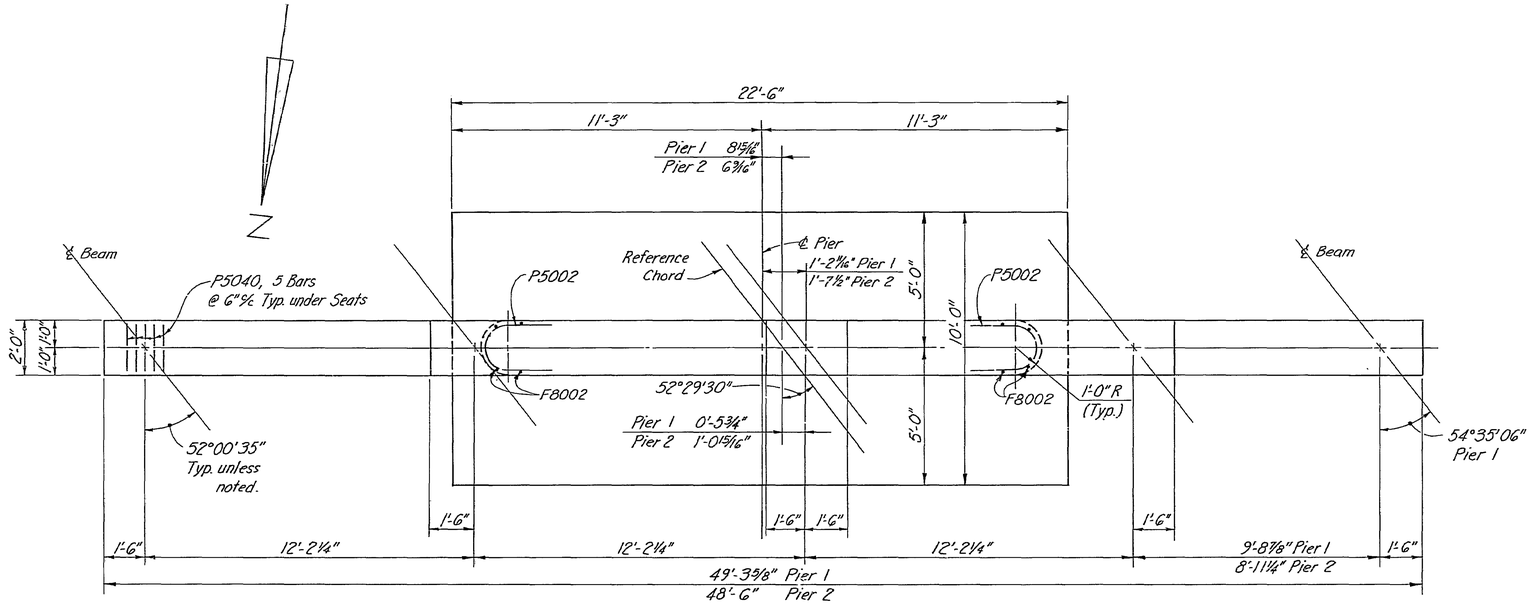

PLAN

TABLE OF ELEVATIONS		
	PIER 1	PIER 2
A	731.84	731.56
B	736.51	736.23
C	739.08	738.73
D	739.24	738.97
E	739.34	739.16
F	739.16	739.05
G	739.01	738.96

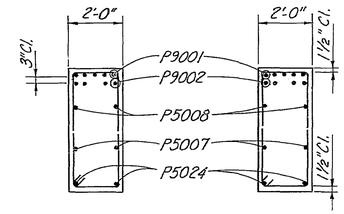

PIER 1 PIER 2

SECTION C-C

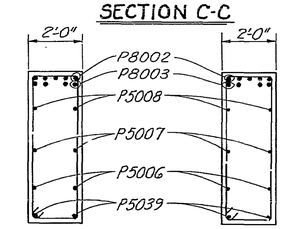

PIER 1 PIER 2

SECTION A-A

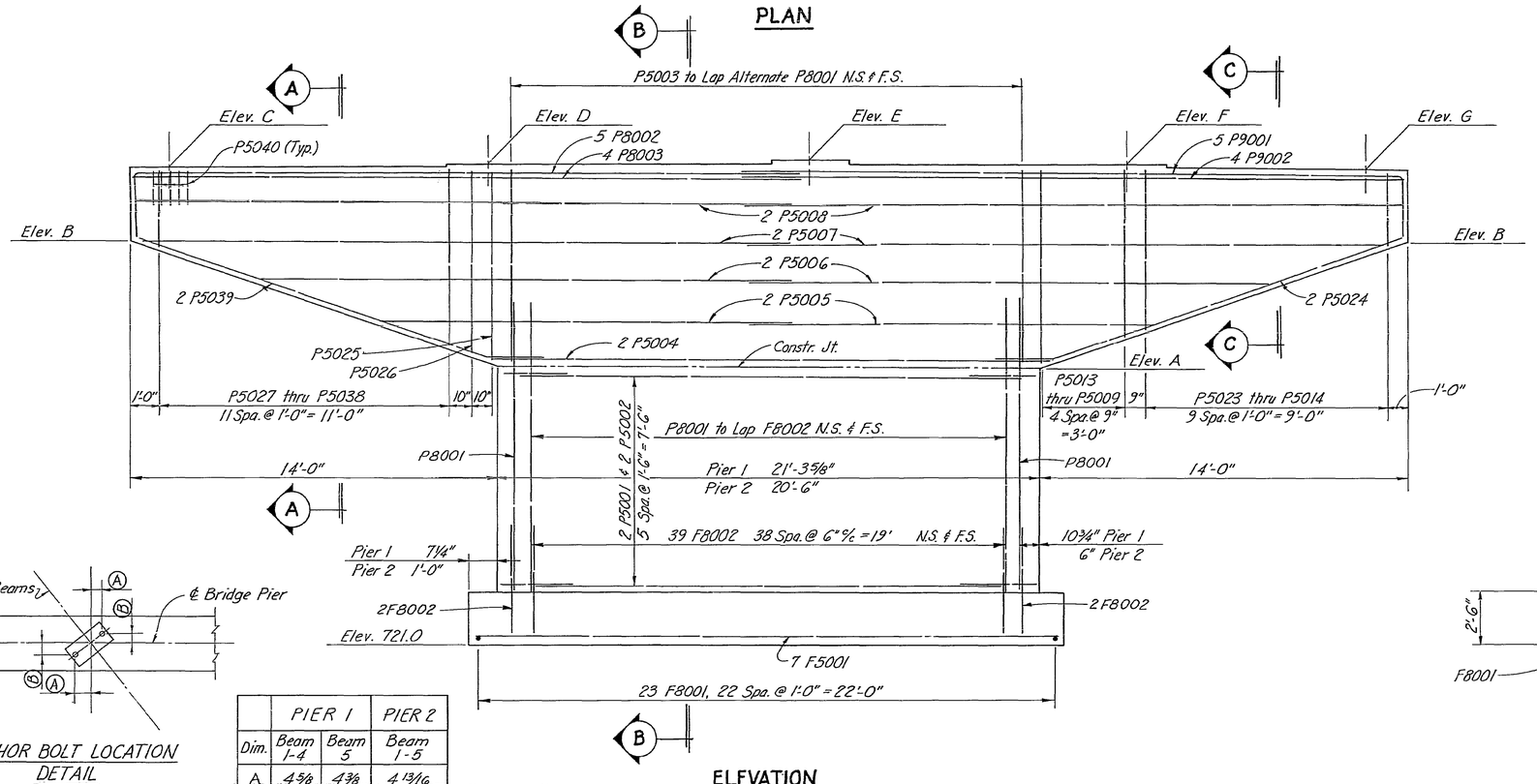

ELEVATION

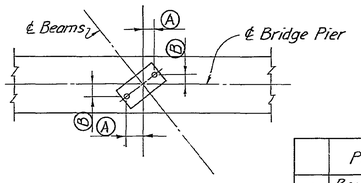

ANCHOR BOLT LOCATION DETAIL

	PIER 1		PIER 2
Dim.	Beam 1-4	Beam 5	Beam 1-5
A.	4 5/8	4 3/8	4 13/16
B	5 15/16	6 3/16	6 3/16

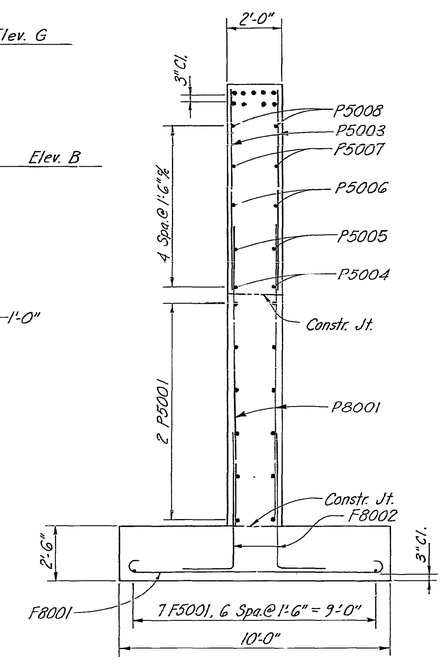

SECTION B-B

NOTES:

Bridge Seat Reinforcing steel in the vicinity of the bridge seat shall be accurately placed to avoid interference with the drilling of bearing anchor holes or the pre-setting of bearing anchors.

Bearing Anchor: At the option of the Contractor, bearing anchors (or formed holes), located and supported by templates, may be cast in place.

Footing reinforcing shall have a minimum cover of 3" at all surfaces.

In reinforcing bar call-outs:
N.S. indicates Near Side
F.S. indicates Far Side

Typical reinforcing bar lap lengths
No. 5 Bars = 19" lap
No. 8 Bars = 30" lap
No. 9 Bars = 34" lap

6/10

ALDEN E. STILSON & ASSOCIATES, LIMITED
CONSULTING ENGINEERS
CLEVELAND, OHIO COLUMBUS, OHIO WHEELING, W. VA.

PIER 1 & 2 DETAILS

BRIDGE NO. FRA-257-0.27
TWP. RD. NO. 257 (BIG RUN RD.) OVER SCIOTO BIG RUN CR.
FRANKLIN COUNTY
STA. 12+81.13 to STA. 14+04.58

DESIGNED	DRAWN	TRACED	CHECKED	REVIEWED	DATE	REVISED
MEM	MEM	LEO	CJK	JEV	1/5/81	

BRUNING 44-500 35583

0290 010 PIER DETAILS 0027 1981 0200 010

FED. RD. DIVISION	STATE	PROJECT	TYPE FUNDS
5	OHIO		

21 / 25

BIG RUN ROAD
TWP. RD. No. 257

All Longitudinal Reinforcing Steel shall be S4002 and S4003 (Top) S5001 and S5002 (Bottom) Unless otherwise shown

A Haunch Width of 9" shall be used for computing quantity of concrete. However, the haunch width may vary between 6" and 12".

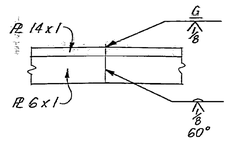

WELDED BUTT JOINT IN SUPERSTRUCTURE END DAM

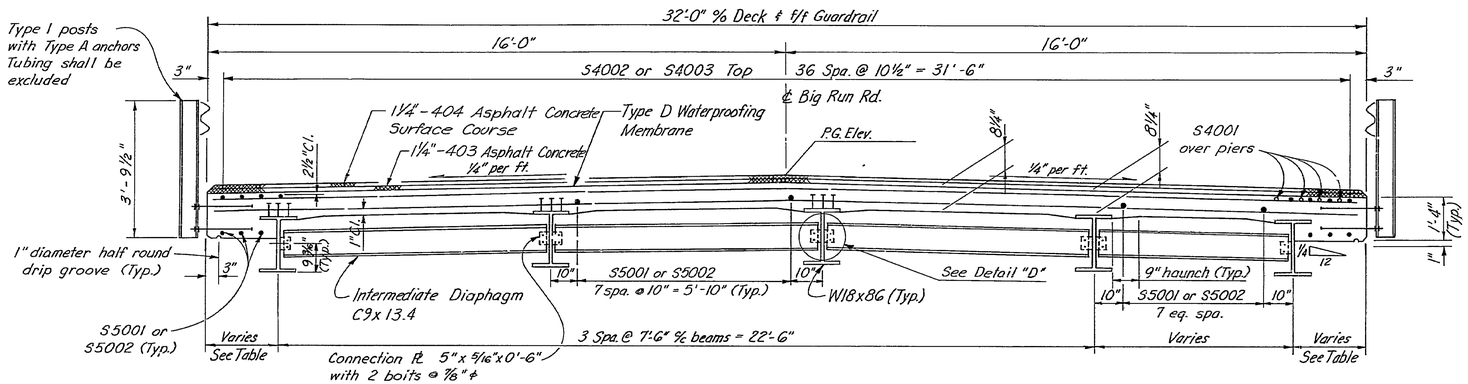

TRANSVERSE SECTION

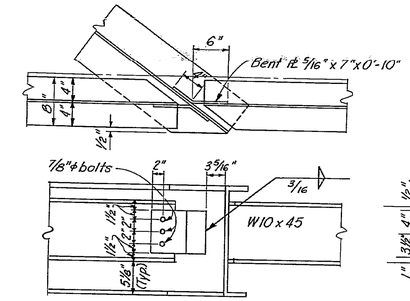

DETAIL "A"

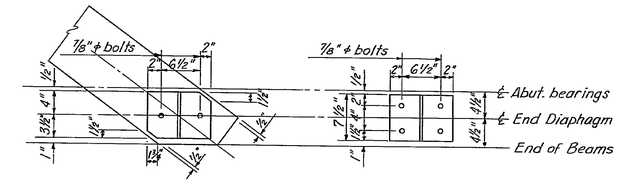

DETAIL "B" DETAIL "C"

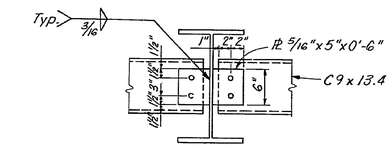

DETAIL "D"

5/8" x 2" bolts at not more than 2'-0" % with nuts tack-welded to under side of lower angle, 1 1/16" holes in upper plate. Center 5/8" bolts in 1 1/16" holes. Apply flake graphite between washers and plate. Turn bolts tight and release one-half turn.
Remove bolts as soon as concrete has set, preferably within two hours after placing, to avoid damage due to temperature expansion or contraction of superstructure. Fill holes with bituminous material.

HIGH STRENGTH BOLTS: All bolts shall be 7/8" ϕ high strength steel ASTM A325, type 3.

BEARING DEVICES: For a structure with plate bearings, on a gradient of 1 per cent or more, the plate at the fixed bearings and the upper plate at the expansion bearings shall be beveled to provide horizontal bearings. The tabulated quantity of Item 511, Structural Steel includes the number of pounds of steel and cast leaded bronze plates and of bearing pads for the plate bearings.

Lap Top Longitudinal Reinforcing = 15"
Lap Bottom Longitudinal Reinforcing = 19"

DECK SLAB DEPTH: The distance shown from top of deck slab to top of steel beam is the design dimension. The quantity of deck concrete to be paid for shall be based on this dimension, even though deviation from it may be necessary because the top flange of the beam may not have the exact camber or conformation required to place it parallel to the finished grade.

GUARD RAIL DETAIL: See Std. Dwg. DBR-2-73.

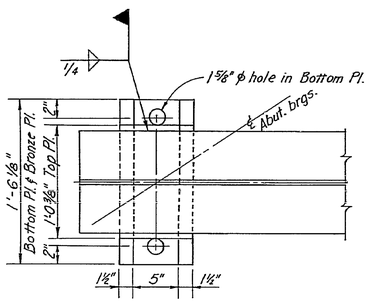

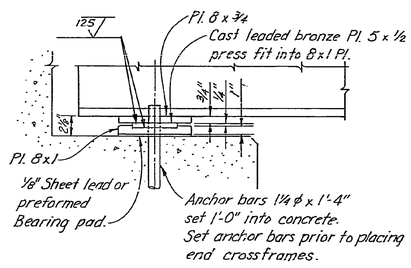

ABUTMENT BEARING DETAILS

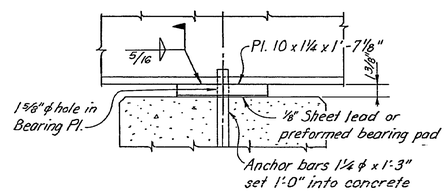

FIXED

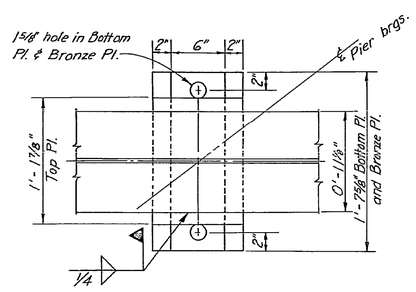

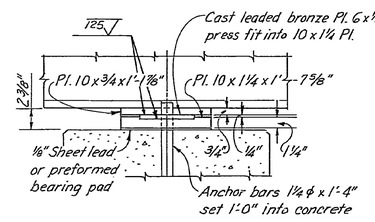

EXPANSION

PIER BEARING DETAILS

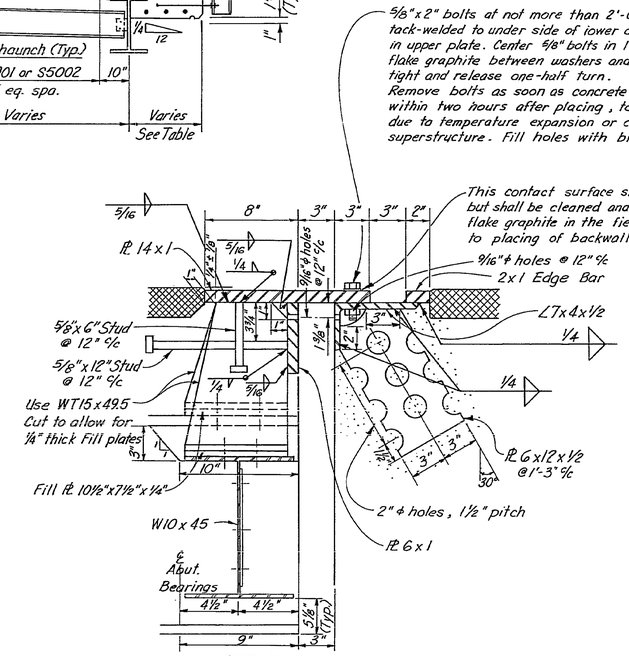

This contact surface shall not be painted but shall be cleaned and lubricated with flake graphite in the field immediately prior to placing of backwall concrete.

A welded butt joint in the end dam, at the apex of roadway, will be required for that portion of the end dam attached to the superstructure.
The portion attached to the backwall shall be placed in segments not less than 6'-0" in length, with a joint at each joint in the backwall and with one of the joints at the apex of roadway. These shall be closely butted but shall not be welded.

SECTION A-A

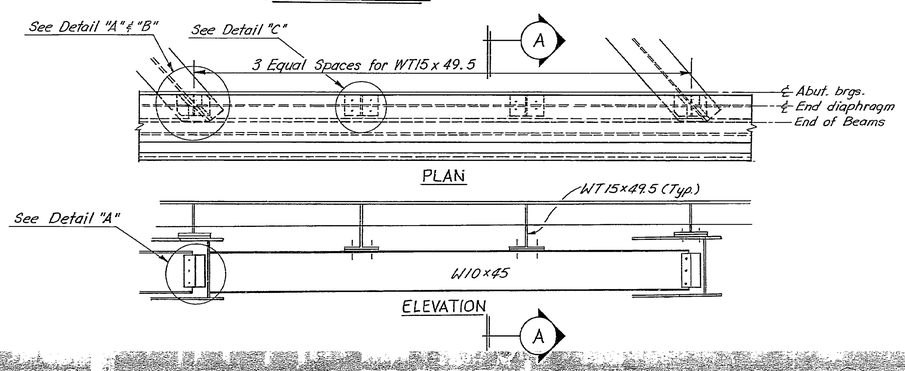

END DIAPHRAGM

SLAB CANTILEVER		
LOCATION	LEFT	RIGHT
West Abutment	1'-10 7/8"	2'-3 5/8"
½ Point	2'-3½"	1'-9¼"
Pier 1	2'-3½"	1'-8½"
Field Splice	2'-1¼"	1'-10¼"
½ Point	1'-11 7/8"	1'-8½"
Pier 2	1'-9½"	1'-10"
½ Point	1'-11¾"	2'-1½"
East Abutment	2'-5"	2'-2 5/8"

7 / 10

ALDEN E. STILSON & ASSOCIATES, LIMITED
CONSULTING ENGINEERS
CLEVELAND, OHIO COLUMBUS, OHIO WHEELING, W. VA.

SUPERSTRUCTURE DETAILS

BRIDGE NO. FRA-257-0.27
TWP. RD. NO. 257 (BIG RUN RD.) OVER SCIOTO BIG RUN CR.
FRANKLIN COUNTY
STA. 12+81.13 to STA. 14+04.58

DESIGNED	DRAWN	TRACED	CHECKED	REVIEWED	DATE	REVISED
MEM	MEM	LEO	CJK	JEV	11/5/81	

END DAMS AND BEARINGS: In lieu of A588 steel, A36 steel, galvanized, shall be furnished for end dams, and may be furnished for bearings, except for upper plate element of bearings. This A-36 steel shall be included with A-588 steel quantity for payment.

BRUNING 44.560 33583

0290 010 SUPERSTRUCTURE DETAILS 0027 1981 0210 010

FED. RD. DIVISION	STATE	PROJECT	TYPE FUNDS
5	OHIO		

22/25

BIG RUN ROAD
TWP. RD. No. 257

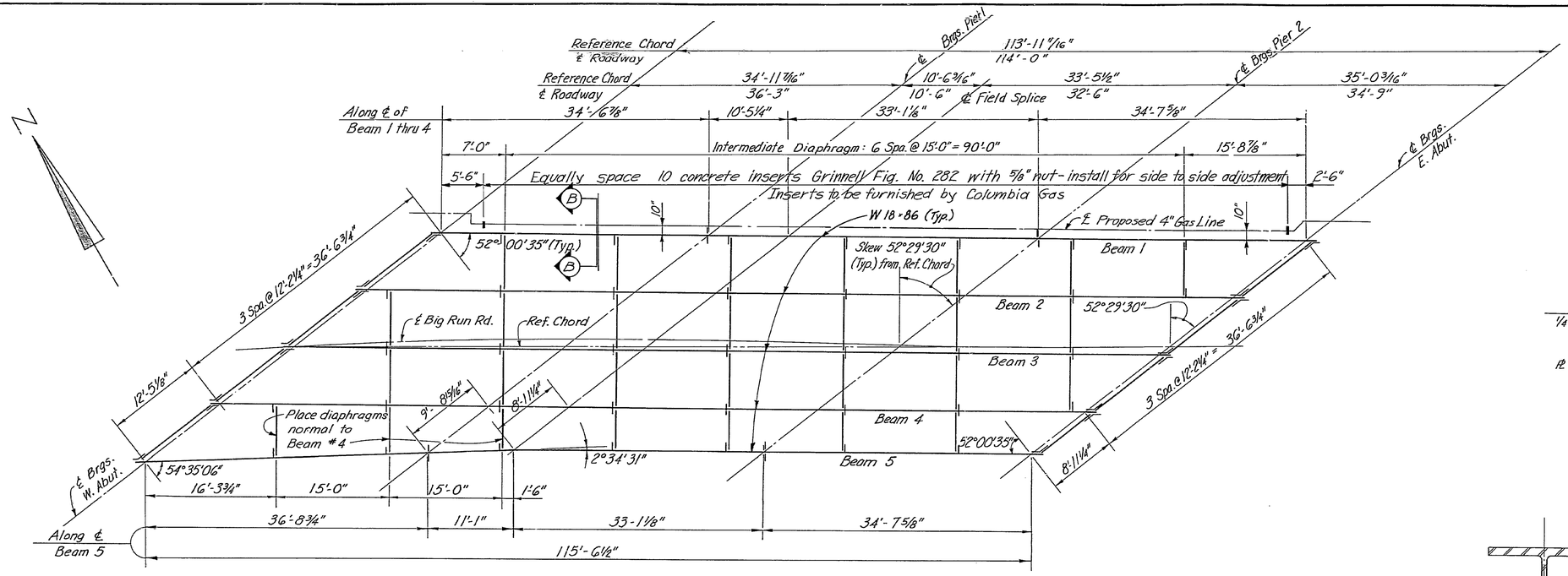

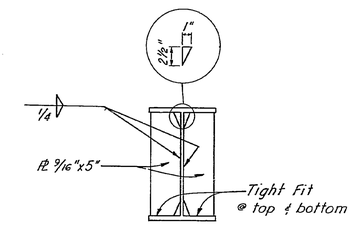

BEARING STIFFENERS @ PIERS

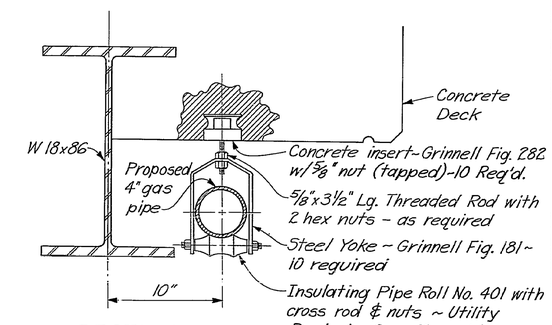

SECTION B-B

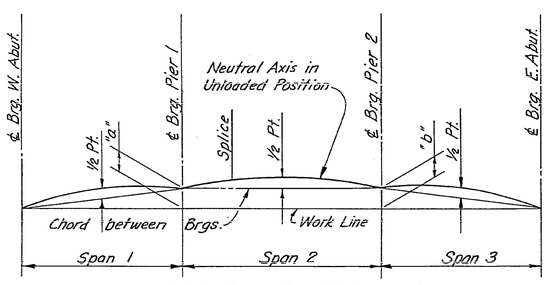

CAMBER and BLOCKING DIAGRAM

BLOCKING TABLE		
Beams	Dimensions "a"	Dimensions "b"
1	3"	3"
2	3"	3"
3	3"	3"
4	3"	3"
5	3 9/16"	3⅛"

DEFLECTION & CAMBER				
Camber Description	Span 1	Span 2		Span 3
	½	Splice	½	½
Defl. due to Wt. of Steel	0	0	1/16	0
Defl. due to Rem. Dead Load	3/16	3/16	5/16	3/16
Adjust due to Curvature	5/16	3/8	½	5/16
Required Shop Camber	½	9/16	⅞	½

CS : Indicates butt weld subject to compressive stress only.

STEEL ERECTION: During the erection of end dams and diaphragms, care shall be taken to insure that stringers, bearing parts and bridge seats remain in bearing contact.

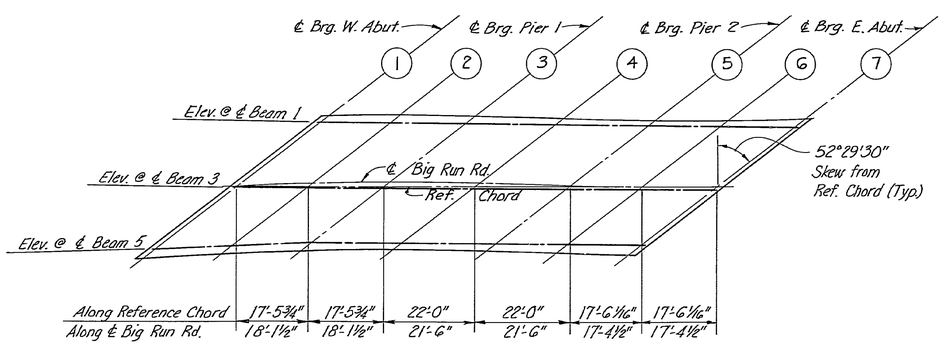

SCREED LINE LOCATIONS

TABLE OF SCREED ELEVATIONS *			
Location	Elevations Beam 1	Elevations Beam 3	Elevations Beam 5
1	741.36	741.53	741.04
2	741.43	741.64	741.23
3	741.41	741.67	741.34
4	741.35	741.69	741.43
5	741.14	741.58	741.38
6	740.96	741.46	741.32
7	740.70	741.25	741.17

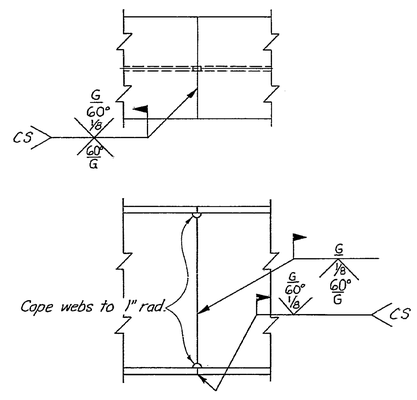

WELDED BEAM SPLICE DETAILS

STEEL ERECTION: During the erection of end dams and diaphragms, care shall be taken to insure that stringers, bearing parts and bridge seats remain in bearing contact.

* Screed Elevations are at top of slab before the concrete deck is placed. Proper allowance has been made for the dead load deflection due to the weight of the concrete.

8/10

ALDEN E. STILSON & ASSOCIATES, LIMITED
CONSULTING ENGINEERS
CLEVELAND, OHIO COLUMBUS, OHIO WHEELING, W. VA.

FRAMING PLAN

BRIDGE NO. FRA-257-0.27
TWP. RD. NO. 257 (BIG RUN RD.) OVER SCIOTO BIG RUN CR.

FRANKLIN COUNTY STA. 12+81.13 to STA. 14+04.58

DESIGNED	DRAWN	TRACED	CHECKED	REVIEWED	DATE	REVISED
CJK	CJK	LEO	MEM	JEV	1/5/81	

BRUNING 44-860 39883

FED. RD. DIVISION	STATE	PROJECT	TYPE FUNDS
5	OHIO		

23
25

BIG RUN ROAD
TWP. RD. Nº 257

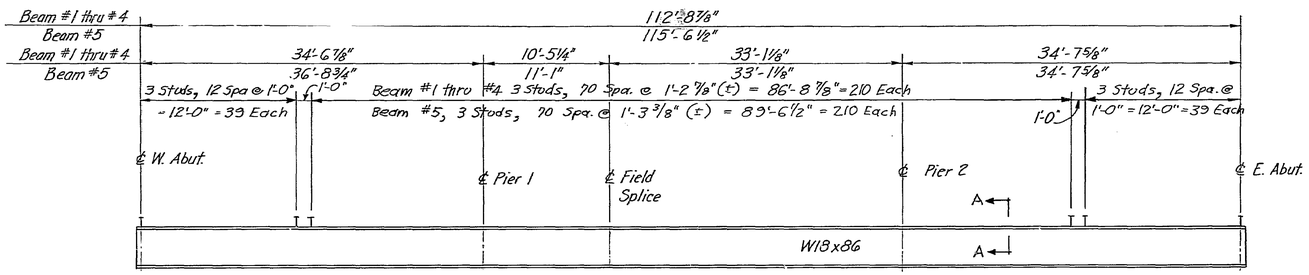

BEAM ELEVATION
(Showing Shear Connectors)

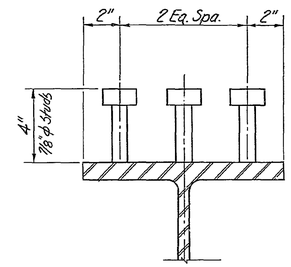

TYPICAL SECTION A-A

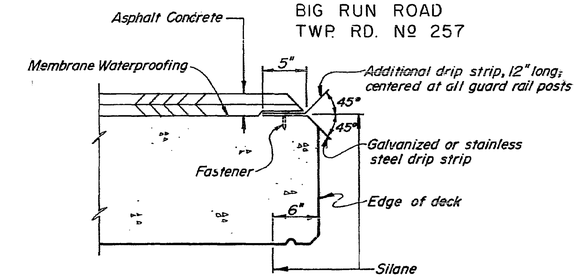

DRIP STRIP

DRIP STRIP: Prior to applying deck membrane waterproofing, a bent drip strip shall be installed along the edges of the deck as shown. The strips shall be fastened at 1'-6" ℄ maximum with 1 1/4" x 9/32" x 1/4" flat head drive pin and washer. (Length x Shank Dia. x Head Dia.) or Nº 10 galvanized screws and expansion anchors, subject to the approval of the Engineer. The strips shall be placed the full length of the deck, ending at the face of the abutment wingwall or steel end dam angle. Where splices are required a 3" (Min.) lap shall be used with a fastener through the lap. Steel for galvanized strips shall be 8" x 0.105" and shall meet the requirements of ASTM A568. Galvanizing shall be in accordance with 711.02. Stainless steel shall be 20 gauge ASTM A167, Type 304, mill finish. Payment shall be at the contract price bid for Item Special, Lin. Ft., Steel Drip Strip, which shall include all materials, labor, tools and incidentals necessary to complete the item.

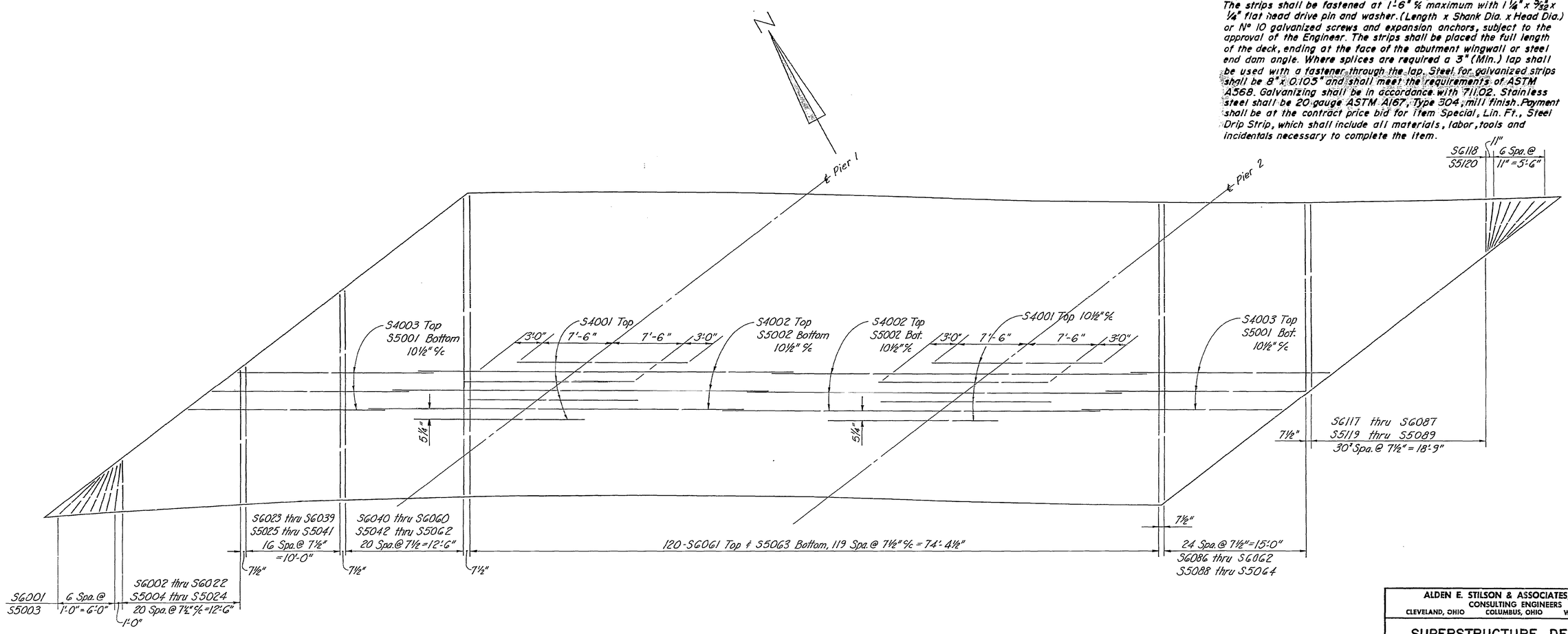

9 110

ALDEN E. STILSON & ASSOCIATES, LIMITED
CONSULTING ENGINEERS
CLEVELAND, OHIO COLUMBUS, OHIO WHEELING, W. VA.

SUPERSTRUCTURE DETAILS

BRIDGE NO. FRA-257-0.27
TWP. RD. NO. 257 (BIG RUN RD.) OVER
SCIOTO BIG RUN CR.

FRANKLIN COUNTY

STA. 12+81.13 to
STA. 14+04.58

DESIGNED	DRAWN	TRACED	CHECKED	REVIEWED	DATE	REVISED
CJK	CJK	LEO	MEM	JEV	1/5/81	

BRUNING 4A-560 33583

0290 010 SUPERSTRUCTURE DETAILS 0027 1981 0230 010

MARK	NUM.	LENGTH	WEIGHT	TYPE	A	B	C	D	E	NOTE
				WEST ABUTMENT						
A 5001	25	4- 5	115	1		1- 6	1- 8	1- 6		
A 5002	13	27- 4	371	ST						
A 5003	13	25- 5	345	ST						
A 5004	10	16- 2	169	ST						
A 5005	10	8- 0	83	ST						
A 5006	2	7- 3	15	ST						
A 5007	2	7- 9	16	ST						
A 5008	18	8- 2	153	ST						
A 5009	2	8- 9	18	ST						
A 5010	2	8- 9		ST						1
THRU			64		VARY	LENGTH	BY	0- 9		
A 5013	2	6- 6		ST						1
A 5014	1	36- 5	38	ST						
A 5015	4	40- 0	167	ST						
A 5016	2	5- 0	10	6	3- 4	1- 0	1- 6			
A 5017	1	29- 6	31	ST						
A 5018	2	31- 9	66	ST						
A 5019	2	33-10	71	ST						
A 5020	2	6- 0	13	6	4- 4	1- 4	1- 6			
A 5021	5	4- 2	22	1		1- 6	1- 5	1- 6		
A 5044	1	7- 6	8	ST						
A 5045	38	8- 2	324	1		2- 6	3- 5	2- 6		
A 6001	55	12- 2	1005	2	3- 6	1- 5	4- 0	1- 5	2- 6	
F 5001	38	8- 8	343	1	1- 0	7-10				
F 6001	38	13- 8	780	1	6- 0	7-10				
F 6002	5	30- 0	225	ST						
F 6003	5	32- 0	240	ST						
F 6004	10	8-10	133	1	5- 0	4- 0				
				EAST ABUTMENT						
A 5001	25	4- 5	115	1		1- 6	1- 8	1- 6		
A 5022	13	29- 2	396	ST						
A 5023	13	20-10	282	ST						
A 5024	10	15-10	165	ST						
A 5025	2	7- 1		ST						1
THRU			64		VARY	LENGTH	BY	0- 5		
A 5028	2	8- 4		ST						1
A 5029	16	8- 4	139	ST						
A 5030	2	5- 9	12	6	4- 1	1- 3	1- 6			
A 5031	10	8- 6	89	ST						
A 5032	4	9- 0	38	ST						
A 5033	2	8- 7	18	ST						
A 5034	2	8- 0	17	ST						
A 5035	2	7- 5	15	ST						
A 5036	2	6- 9	14	6	4- 2	1- 8	2- 3			
A 5037	1	31- 9	33	ST						
A 5038	2	34- 0	71	ST						
A 5039	2	36- 0	75	ST						
A 5040	1	31- 0	32	ST						
A 5041	2	34- 3	71	ST						
A 5042	2	35- 3	74	ST						
A 5043	6	4- 2	26	1		1- 6	1- 5	1- 6		
A 5045	35	8- 2	298	1		2- 6	3- 5	2- 6		
A 5046	1	6- 9	7	ST						
A 6001	52	12- 2	950	2	3- 6	1- 5	4- 0	1- 5	2- 6	
F 5001	35	8- 8	317	1	1- 0	7-10				
F 6001	35	13- 8	719	1	6- 0	7-10				
F 6005	5	30- 0	225	ST						
F 6006	5	29- 0	218	ST						
F 6007	12	8-10	159	1	5- 0	4- 0				

MARK	NUM.	LENGTH	WEIGHT	TYPE	A	B	C	D	E	NOTE
				PIERS						
P 5001	24	18- 6	463	ST						
P 5002	24	6- 5	161	7	2- 0	2- 0	0- 9			
P 5003	82	7- 2	613	ST						
P 5004	4	21- 2	88	ST						
P 5005	8	16- 6	138	ST						
P 5006	8	21- 0	175	ST						
P 5007	8	25- 3	211	ST						
P 5008	8	25- 3	211	ST						
P 5009	2	15-11		3	5-10	1- 9	5-10	1- 9		1
THRU			177		VARY	LENGTH	BY	0- 6		
					VARY	DIM. A	& C BY	0- 3		
P 5013	2	17-11		3	6-10	1- 9	6-10	1- 9		1
P 5014	2	9- 5		3	2- 7	1- 9	2- 7	1- 9		1
THRU			260		VARY	LENGTH	BY	0- 8		
					VARY	DIM. A	& C BY	0- 4		
P 5023	2	15- 5		3	5- 7	1- 9	5- 7	1- 9		1
P 5024	4	16-10	70	6	14- 1	4- 7	2- 0			
P 5025	2	11- 0	23	3	6- 9	1- 9		1- 9		
P 5026	2	10- 9	22	3	6- 6	1- 9		1- 9		
P 5027	2	9- 5		3	2- 7	1- 9	2- 7	1- 9		1
THRU			328		VARY	LENGTH	BY	0- 8		
					VARY	DIM. A	& C BY	0- 4		
P 5038	2	16- 9		3	6- 3	1- 9	6- 3	1- 9		1
P 5039	4	17- 4	72	6	14- 8	4- 7	2- 0			
P 5040	50	4- 5	230	1		1- 6	1- 8	1- 6		
P 8001	164	11- 0	4817	ST						
P 8002	10	29- 5	785	1	27- 6	2- 2				
P 8003	8	27- 6	587	ST						
P 9001	10	30- 5	1034	1	28- 6	2- 2				
P 9002	8	28- 6	775	ST						
F 5001	14	22- 0	321	ST						
F 8001	46	11- 8	1433	10	9- 6					
F 8002	164	6- 9	2956	1	2- 0	5- 0				
				SUPERSTRUCTURE						
S 4001	72	18- 0	866	ST						
S 4002	74	41-11	2072	ST						
S 4003	74	20- 0	989	ST						
S 5001	74	20- 0	1544	ST						
S 5002	74	42- 5	3274	ST						
S 5003	7	5- 2	38	ST						
S 5004	1	5- 4		ST						1
THRU			212		VARY	LENGTH	BY	0- 5	1/ 4	
S 5024	1	14- 0		ST						1
S 5025	1	14- 6		ST						1
THRU			320		VARY	LENGTH	BY	0- 5	1/ 4	
S 5041	1	21- 7		ST						1
S 5042	1	22- 1		ST						1
THRU			585		VARY	LENGTH	BY	0- 5	1/ 2	
S 5062	1	31- 4		ST						1
S 5063	120	31- 8	3963	ST						
S 5064	1	19- 4		ST						1
THRU			666		VARY	LENGTH	BY	0- 6	1/ 4	
S 5088	1	31- 9		ST						1
S 5089	1	5- 6		ST						1
THRU			410		VARY	LENGTH	BY	0- 5	3/ 4	
S 5119	1	19-10		ST						1
S 5120	7	5- 4	39	ST						

MARK	NUM.	LENGTH	WEIGHT	TYPE	A	B	C	D	E	NOTE
				SUPERSTRUCTURE				(CONTINUED)		
S 6001	7	5- 2	54	ST						
S 6002	1	5- 4		ST						1
THRU			305		VARY	LENGTH	BY	0- 5	1/ 4	
S 6022	1	14- 0		ST						1
S 6023	1	14- 6		ST						1
THRU			461		VARY	LENGTH	BY	0- 5	1/ 4	
S 6039	1	21- 7		ST						1
S 6040	1	22- 1		ST						1
THRU			842		VARY	LENGTH	BY	0- 5	1/ 2	
S 6060	1	31- 4		ST						1
S 6061	120	31- 8	5708	ST						
S 6062	1	19- 4		ST						1
THRU			959		VARY	LENGTH	BY	0- 6	1/ 4	
S 6086	1	31- 9		ST						1
S 6087	1	5- 6		ST						1
THRU			590		VARY	LENGTH	BY	0- 5	3/ 4	
S 6117	1	19-10		ST						1
S 6118	7	5- 4	56	ST						

FED. RD. DIVISION	STATE	PROJECT	TYPE FUNDS
5	OHIO		

24
25

BIG RUN ROAD
TWP. RD. Nº. 257

NOTES

1. INDICATES SERIES BAR. EACH BAR VARIES FROM ADJACENT BAR(S) BY TABULATED AMOUNT(S), CALCULATED TO NEAREST 1/8 INCH. WEIGHT SHOWN IS FOR ENTIRE SERIES UTILIZING AVERAGE LENGTH.

BAR SIZE DESIGNATION

BAR SIZE IS INDICATED IN THE BAR MARK. THE FIRST DIGIT WHERE FOUR DIGITS ARE USED, AND FIRST TWO DIGITS WHERE FIVE DIGITS ARE USED, INDICATE THE BAR SIZE NUMBER. FOR EXAMPLE, A7001 IS A NO. 7 SIZE BAR AND A10140 IS A NO. 10 SIZE.

REFER TO CMS SECTIONS 106.03, 700, 709.01 THROUGH 709.05 AND 709.08. SUFFICIENT ADDITIONAL REINFORCING STEEL SHALL BE PROVIDED FOR SAMPLING. RANDOM SAMPLES SHALL BE REPLACED IN THE STRUCTURES BY THE ADDITIONAL STEEL, SPLICED IN ACCORDANCE WITH 509.08.

BAR BENDING DIAGRAM TYPES

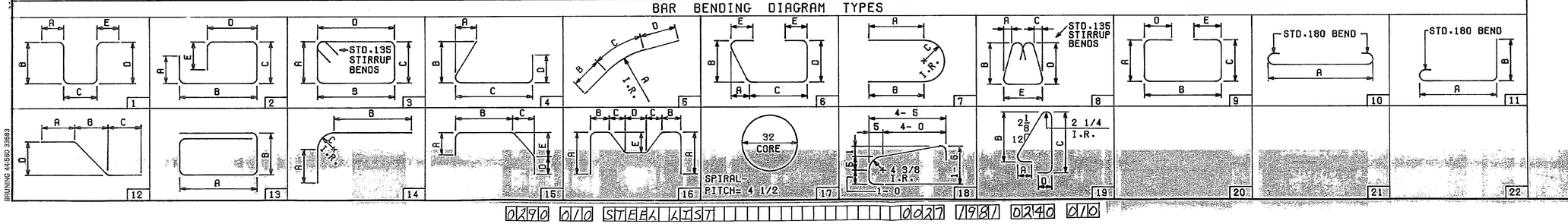

10/10

ALDEN E. STILSON & ASSOCIATES, LIMITED
CONSULTING ENGINEERS
CLEVELAND, OHIO COLUMBUS, OHIO WHEELING, W. VA.

REINFORCING STEEL LIST

BRIDGE NO. FRA-257-0.27
TWP. RD. NO. 257 (BIG RUN RD.) OVER
SCIOTO BIG RUN CR.

FRANKLIN COUNTY STA. 12+81.13 to STA. 14+04.58

DESIGNED	DRAWN	TRACED	CHECKED	REVIEWED	DATE	REVISED
MEM			CJK	JEV	1/5/87	

0290 010 STEEL LIST 0027 1987 0240 010

BRUNING 44-560 33583

WELDING SYMBOLS

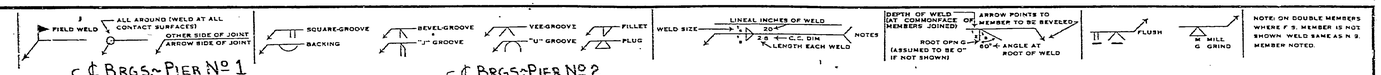

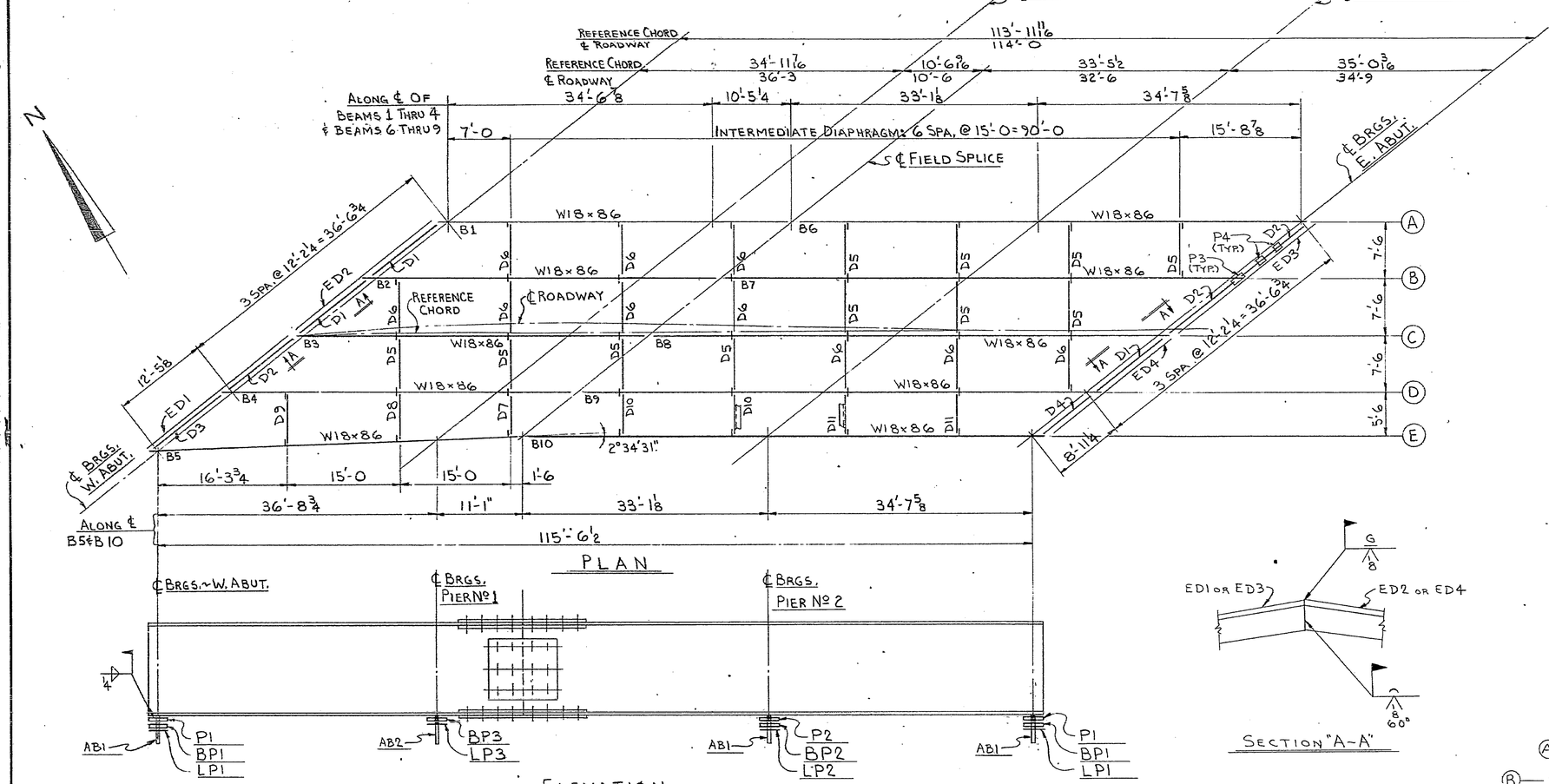

ELEVATION
(LINES Ⓐ THRU Ⓔ)

SECTION "A-A"

GENERAL NOTES

1. ALL HOLES INDICATED (R.A.) ARE TO BE SUB-DRILLED 11/16" ϕ AND REAMED ASSEMBLED TO 15/16" ϕ IN THE SHOP.
2. ALL STEEL WILL BE ASTM-A588, EXCEPT END DAMS WHICH WILL BE ASTM-A36 GALVANIZED.
3. ALL WELDS TO BE IN ACCORDANCE WITH CURRENT A.W.S. SPECIFICATIONS.
4. THIS STRUCTURE WILL CONFORM TO THE OHIO DEPARTMENT OF TRANSPORTATION'S "CONSTRUCTION AND MATERIAL SPECIFICATIONS" (DATED 1981).
5. MATCH MARK ALL SPLICE MATERIAL FOR RE-ASSEMBLING IN THE FIELD IN THE SAME RELATIVE POSITION AS AT SHOP REAMING.
6. SEE SHEET LD1 FOR LAYDOWN DIAGRAM.
7. ELECTROGAS AND ELECTROSLAG WELDING ARE NOT PERMITTED.

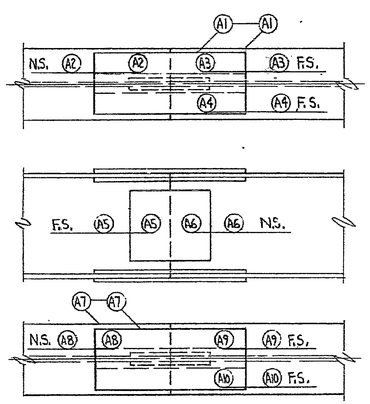

TYPICAL FIELD SPLICE MATCH MARKING DETAIL

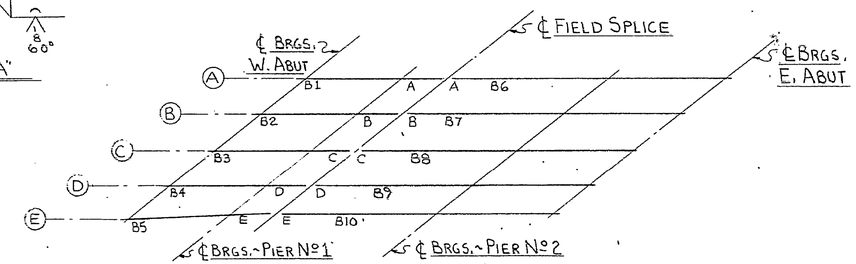

MATCH MARKING DIAGRAM

ERECTION SHEETS		FIELD BOLTS (NET)
FRAMING PLAN & MATCH MK.	E-1	244 - 7/8"ϕ × 3 A-325 (TYPE 3) H.H.BLT. w/H.N. & F.W. (FLG. & END DAM)
LAYDOWN DIAGRAM	LD1	60 - 7/8"ϕ × 2 3/4 A-325 (TYPE 3) H.H.BLT. w/H.N. & F.W. (WEB)
DETAIL SHEETS		160 - 7/8"ϕ × 2 A-325 (TYPE 3) H.H.BLT. w/H.N. & F.W. (DIAPHRAGMS)
BEAM DETAILS	1 THRU 10	
DIAPHRAGMS	11 & 12	
BEARINGS	12	
END DAMS	13 & 14	

0290 0/0 FRAMING PLAN 0027 1981 0261 0/0

APPROVED
FRANKLIN COUNTY ENG.
DATE: 3-26, 1982

Rev. 1, CEH, 3-16-82, Rev. END DAM MARKING & ADD. SECT. "A-A"

PROJ. Nº-ENG. EST. 11-81

ISSUE		
FOR	NO	DATE
APPROVAL	3	2-18-82
FRANKLIN CO.	3	3-24-82
SHOP	3	3/16/82
CONTR	3	3-24-82

HOLES — . —//—

HOWARD PHILLIPS CO.
FRANKLIN CO. ENG. DEPT.
BRIDGE Nº FRA-257-0.27
TWP. RD. OVER BIG RUN CR.
FRANKLIN CO., OHIO

SHOP PAINT —//—

FRAMING PLAN & MATCH MARKING

THE C. E. MORRIS COMPANY
COLUMBUS, OHIO

MADE BY T. McCONNELL DATE 1/82
CHECKED BY CEH DATE 2/82

CONT. No. C3469 SHEET No. E1 OF 1

WELDING SYMBOLS

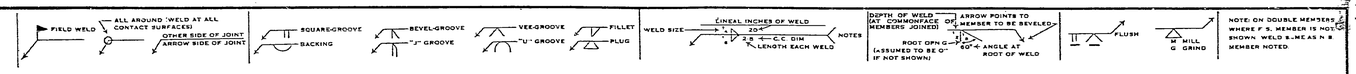

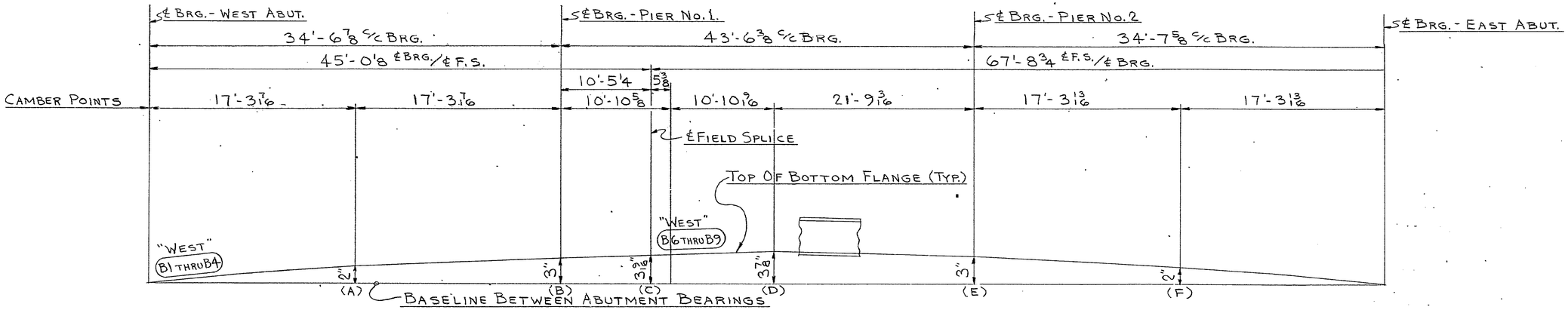

LAYDOWN DIAGRAM FOR BEAM LINES ① THRU ④
(DEVELOPED ELEVATION)

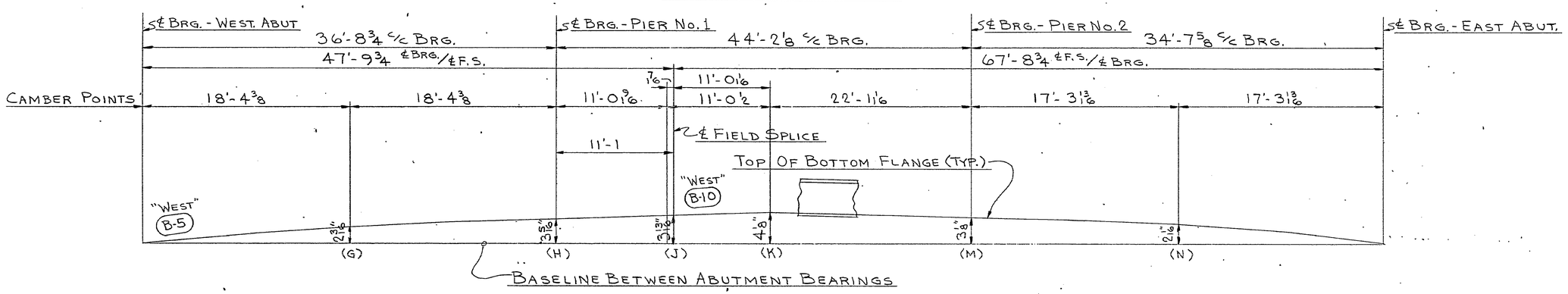

LAYDOWN DIAGRAM FOR BEAM LINE ⑤
(DEVELOPED ELEVATION)

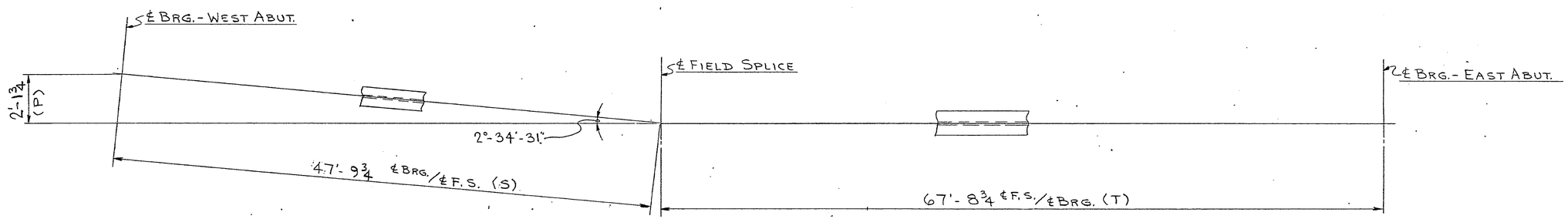

PLAN VIEW OF BEAM LINE ⑤
(LOOKING AT BOTTOM FLANGE)

SHOP RECORDED DIMENSIONS

LINE \ POINT	(A)	(B)	(C)	(D)	(E)	(F)	(G)	(H)	(J)	(K)	(M)	(N)	(P)	(S)	(T)
1															
2															
3															
4															
5															

PROJECT: ENG'R. EST. 11-81

ISSUE		
FOR	NO	DATE
APPROVAL	3	2-18-82
FRA. CO.	3	3-24-82
SHOP	3	3-16-82
CONTR.	3	3-24-82

HOWARD PHILLIPS CO.
FRANKLIN CO. ENGINEERING DEPT.
BRIDGE NO. FRA-257-0.27
TWP. RD. 257 OVER BIG RUN CR.
FRANKLIN COUNTY, OHIO

HOLES — #
SHOP PAINT #

LAYDOWN DIAGRAMS

THE C. E. MORRIS COMPANY
COLUMBUS, OHIO

MADE BY C. HAYDEN CHECKED BY C. R.H.
DATE 1/82 DATE 2/82

CONT. NO. C-3469 SHEET NO. LD1 OF 1

0290 010 LAYDOWN DIAGRAM 0027 1981 0262 010

BRUNING 40-135 38557

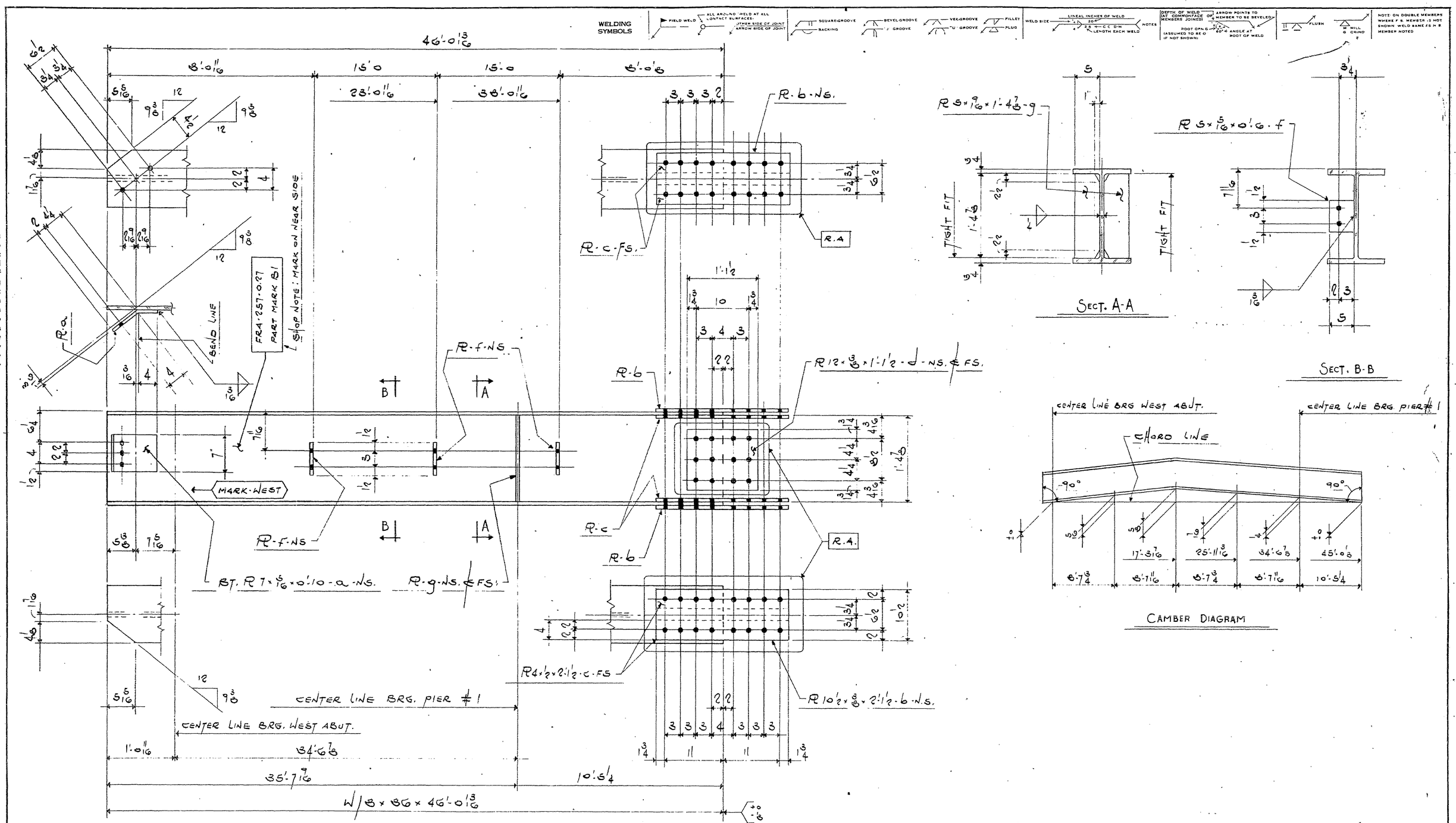

ONE-BEAM-B1

SHOP NOTE:

1.) ALL STEEL TO BE ASTM-A588
2.) SEE SHEET E-1 FOR GENERAL

ISSUE		
FOR	NO	DATE
APPROVAL	3	12-18-82
FRA. CO.	3	3-24-82
SHOP	3	3-24-82
CONTR.	3	3-24-82

HOLES— 13/16 ϕ

PROJECT: ENG'R. EST. 11-B1

HOWARD PHILLIPS CO.
FRANKLIN CO. ENGINEERING DEPT.
BRIDGE NO. FRA-257-0.27
TWP. RD. 257 OVER BIG RUN CR.
FRANKLIN COUNTY, OHIO

SHOP PAINT NONE

BEAM-B1

THE C. E. MORRIS COMPANY
COLUMBUS, OHIO

MADE BY C.R.H. DATE 2/82
CHECKED BY CEH DATE 2/82

CONT. NO. C-3469 SHEET NO. 1 OF 14

0290 010 BEAM DETAILS BEAM 1 0027 1981 0270 010

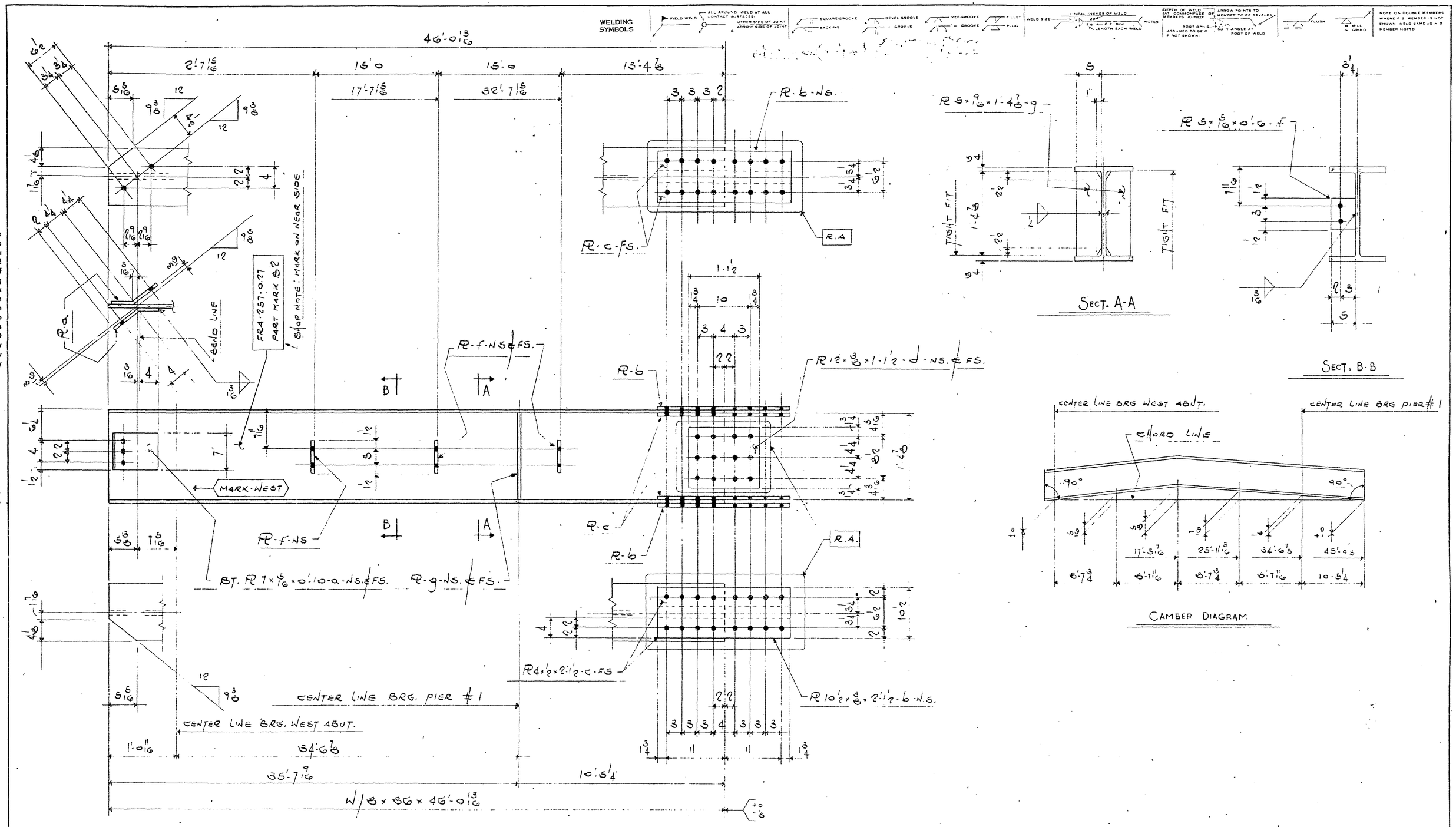

ONE-BEAM-B2

SHOP NOTE:

1.) ALL STEEL TO BE ASTM-A588

2.) SEE SHEET E-1 FOR GENERAL

ISSUE		
FOR	NO	DATE
APPROVAL	3	2-18-82
FRA. CO.	3	3-24-82
SHOP	3	3-07-82
CONTR	3	3-24-82

HOLES — 5/8 ⌀

PROJECT: ENG'R. EST. 11-81

HOWARD PHILLIPS CO.
FRANKLIN CO. ENGINEERING DEPT.
BRIDGE NO. FRA-257-0.27
TWP. RD. 257 OVER BIG RUN CR.
FRANKLIN COUNTY, OHIO

SHOP PAINT NONE

BEAM - B2

THE C. E. MORRIS COMPANY
COLUMBUS, OHIO

MADE BY C.R.H. DATE 2/82
CHECKED BY CEH DATE 2/82

CONT. NO. C-3469 SHEET NO. 2-05-14

0290 010 BEAM DETAILS BEAM 2 0027 1981 0277 010

DRAWING 40-135 36597

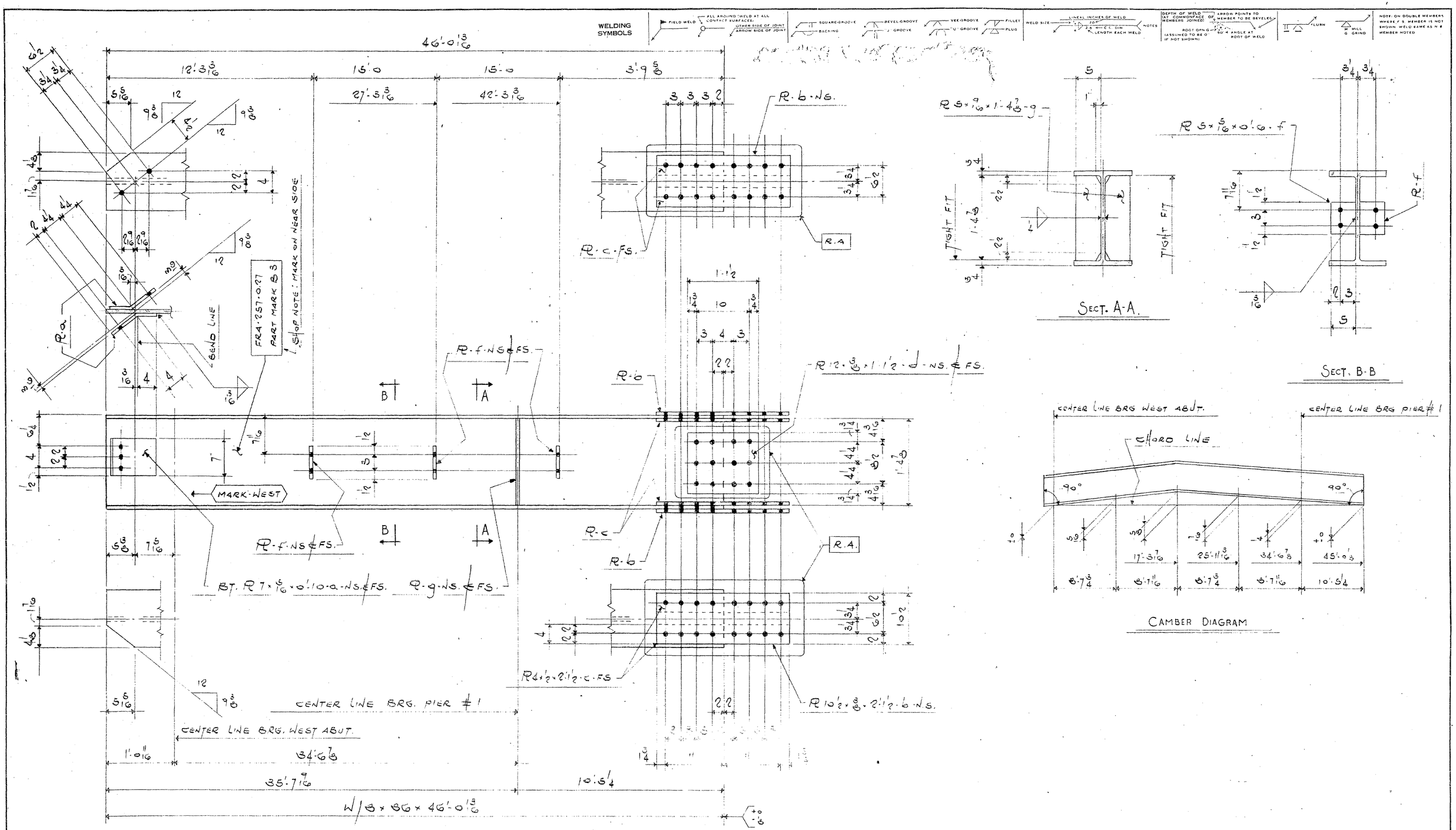

ONE-BEAM-B3

STOP NOTE:

1.) ALL STEEL TO BE ASTM-A588
2.) SEE SHEET E-1 FOR GENERAL

ISSUE		
FOR	NO	DATE
APPROVAL	3	2-18-82
FRA. CO.	3	3-24-82
STOP	3	3-03-82
CONTR.	3	3-24-82

HOLES — 13/16 ϕ

PROJECT: ENG'R. EST. 11-81

HOWARD PHILLIPS CO.
FRANKLIN CO. ENGINEERING DEPT.
BRIDGE NO. FRA-257-0.27
TWP. RD. 257 OVER BIG RUN CR.
FRANKLIN COUNTY, OHIO

SHOP PAINT NONE

BEAM - B3

THE C. E. MORRIS COMPANY
COLUMBUS, OHIO

MADE BY C.R.H. DATE 2/82 CHECKED BY CEM DATE 2/82

CONT. No. C-3469 SHEET No. 3 OF 14

0290 010 BEAM DETAILS BEAM 3 0027 1981 0272 010

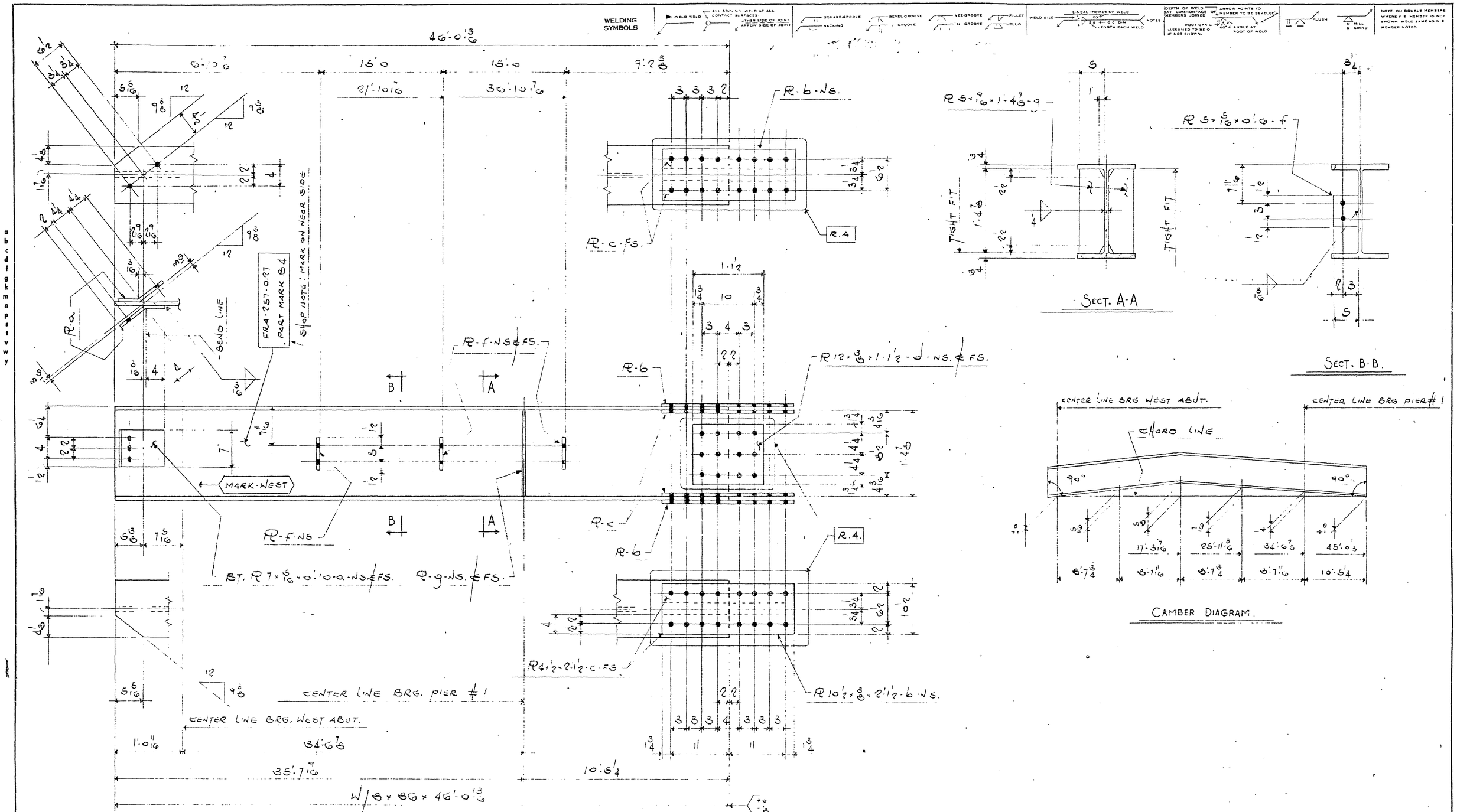

ONE-BEAM-B4

SHOP NOTE:

1.) ALL STEEL TO BE ASTM-A588
2.) SEE SHEET E-1 FOR GENERAL

PROJECT: ENG'R. EST. 11-81

ISSUE		
FOR	NO	DATE
APPROVAL	3	2-18-82
FRA. CO.	3	3-24-82
SHOP	3	3-09-82
CONTR	3	3-24-82

HOWARD PHILLIPS CO.
FRANKLIN CO. ENGINEERING DEPT.
BRIDGE NO. FRA-257-0.27
TWP. RD. 257 OVER BIG RUN CR.
FRANKLIN COUNTY, OHIO

HOLES — 5/16 ⌀
SHOP PAINT NONE

BEAM - B4

THE C. E. MORRIS COMPANY
COLUMBUS, OHIO

MADE BY C.R.H. DATE 2/82
CHECKED BY CEH DATE 2/82

CONT. NO. C-3469 SHEET NO 4-OF-14

0290 010 BEAM DETAILS BEAM 4 6027 1981 0273 010

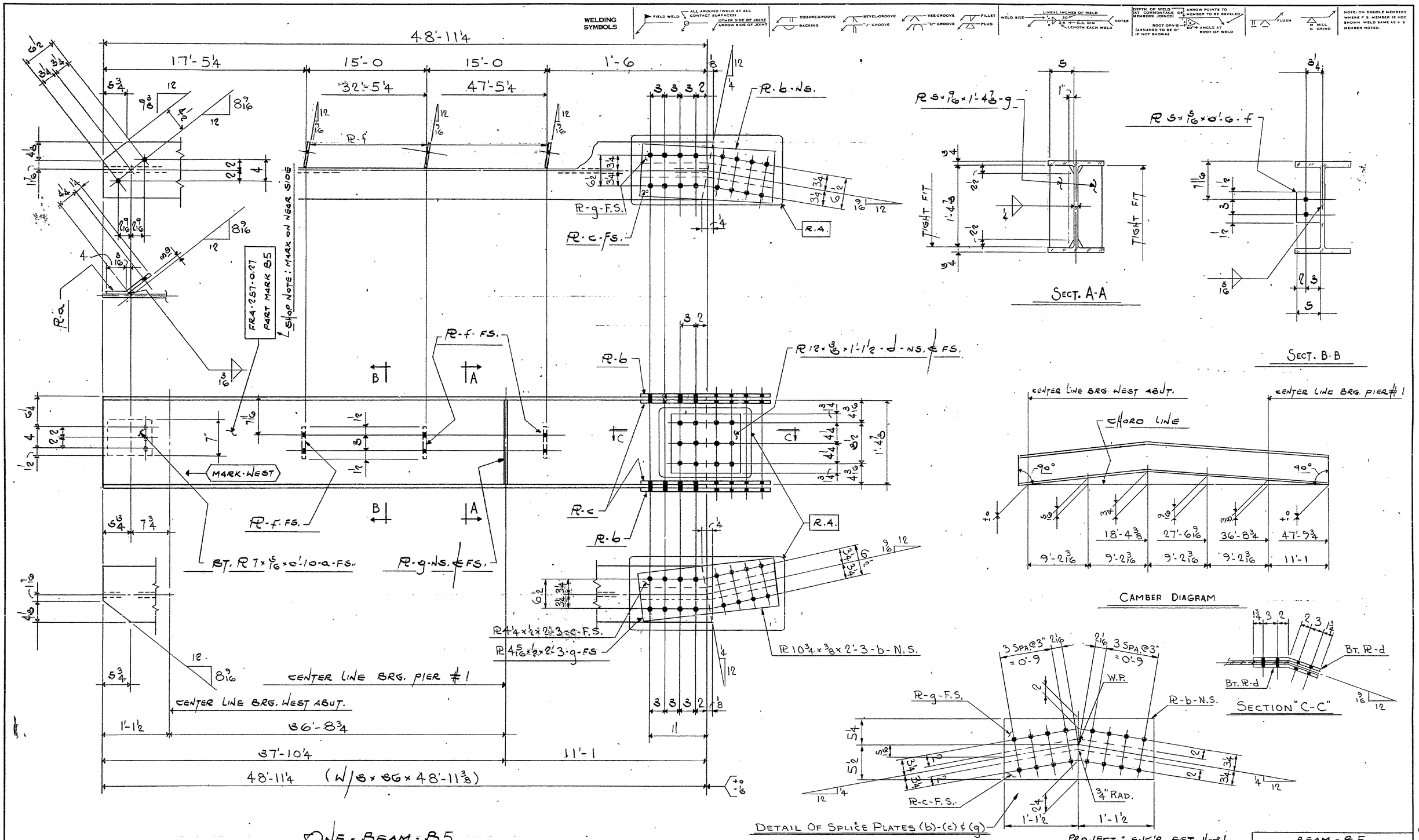

ONE-BEAM-B5

SHOP NOTE:

1.) ALL STEEL TO BE ASTM-A588

2.) SEE SHEET E-1 FOR GENERAL

ISSUE		
FOR	NO	DATE
APPROVAL	3	2-18-82
FRA. CO.	3	3-24-82
SHOP	3	3-09-82
CONTR.	3	3-24-82

HOLES — 15/16"ϕ

HOWARD PHILLIPS CO.
FRANKLIN CO. ENGINEERING DEPT.
BRIDGE NO. FRA-257-0.27
TWP. RD. 257 OVER BIG RUN CR.
FRANKLIN COUNTY, OHIO

SHOP PAINT NONE

PROJECT: ENG'R. EST. 11-81

BEAM-B5

THE C. E. MORRIS COMPANY
COLUMBUS, OHIO

MADE BY CEH DATE 2/82 CHECKED BY C.R.H. DATE 2/82

CONT. No. C-3469 SHEET No. 5 OF 14

0290 010 BEAM DETAILS BEAM 5 0037 1981 0274 010

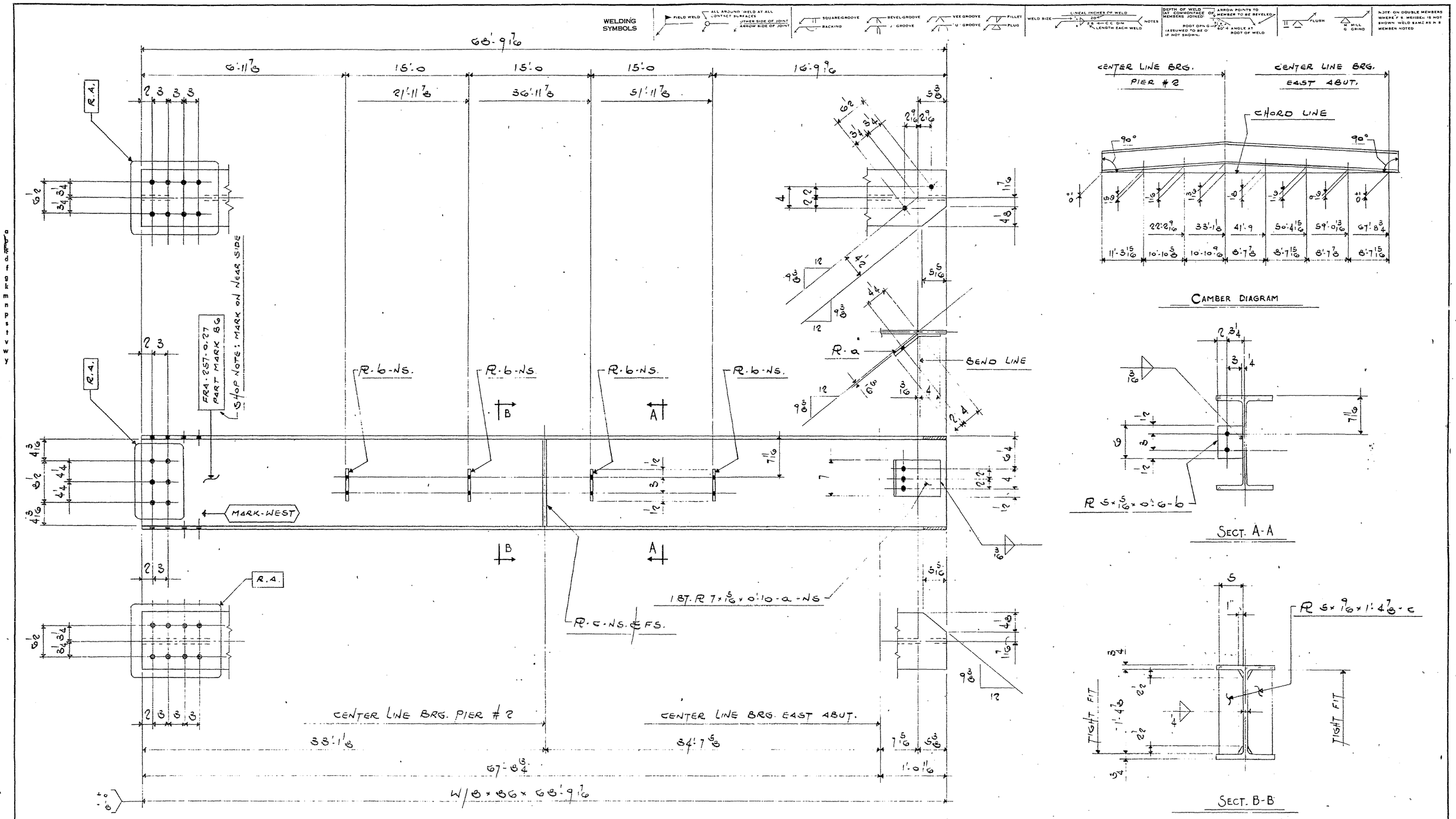

SHOP NOTE:

1.) ALL STEEL TO BE ASTM-A588

2.) SEE SHEET E-1 FOR GENERAL

PROJECT: ENG'R. EST. 11-81

ISSUE		
FOR	NO	DATE
APPROVAL	3	2-18-82
FRA. CO.	3	3-24-82
SHOP	3	3-24-82
CONTR	3	3-24-82

HOWARD PHILLIPS CO.
FRANKLIN CO. ENGINEERING DEPT.
BRIDGE NO. FRA-257-0.27
TWP. RD. 257 OVER BIG RUN CR.
FRANKLIN COUNTY, OHIO

HOLES — 15/16 ϕ

SHOP PAINT NONE

BEAM - B6

THE C. E. MORRIS COMPANY
COLUMBUS, OHIO

MADE BY C.R.H. DATE 2/82
CHECKED BY CEH DATE 2/82

CONT. No. C-3469 SHEET No. 6 OF 14

0290 010 BEAM DETAILS BEAM 6 0027 1981 0275 010

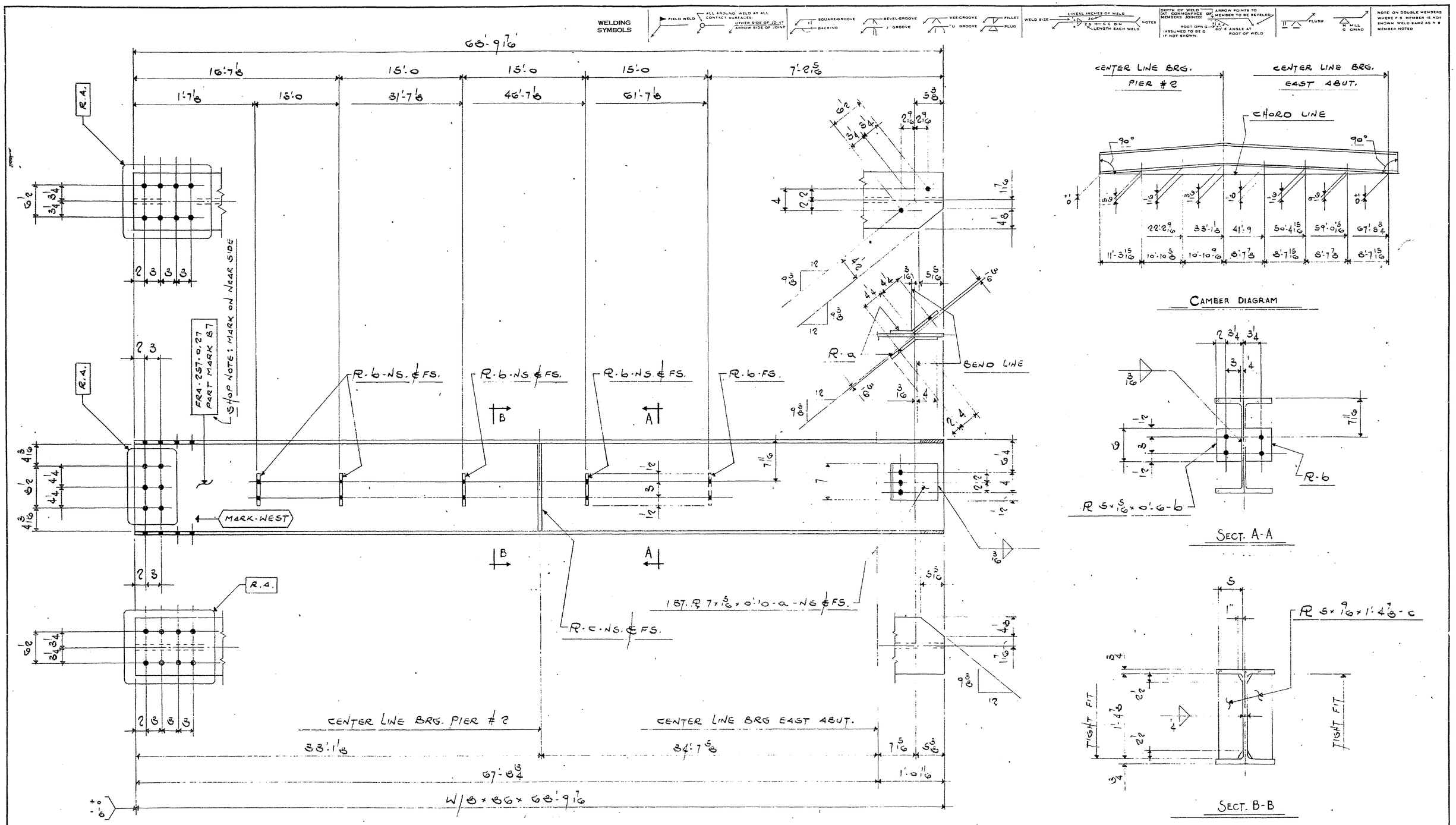

SHOP NOTE:

1.) ALL STEEL TO BE ASTM-A588

2.) SEE SHEET E-1 FOR GENERAL

ISSUE		
FOR	NO	DATE
APPROVAL	3	2-18-82
FRA. CO.	3	3-24-82
SHOP	3	3-24-82
CONTR	3	3-24-82

HOLES — 13/16 ϕ

PROJECT: ENG'R. EST. 1-81

HOWARD PHILLIPS CO.
FRANKLIN CO. ENGINEERING DEPT.
BRIDGE NO. FRA-257-0.27
TWP. RD. 257 OVER BIG RUN CR.
FRANKLIN COUNTY, OHIO

SHOP PAINT NONE

BEAM - B7

THE C. E. MORRIS COMPANY
COLUMBUS, OHIO

MADE BY C.R.H. DATE 2/82
CHECKED BY CEH DATE 2/82

CONT. No. C-8469 SHEET No. 7 OF 14

0270 010 BEAM DETAILS BEAM 7 00027 1981 0276 010

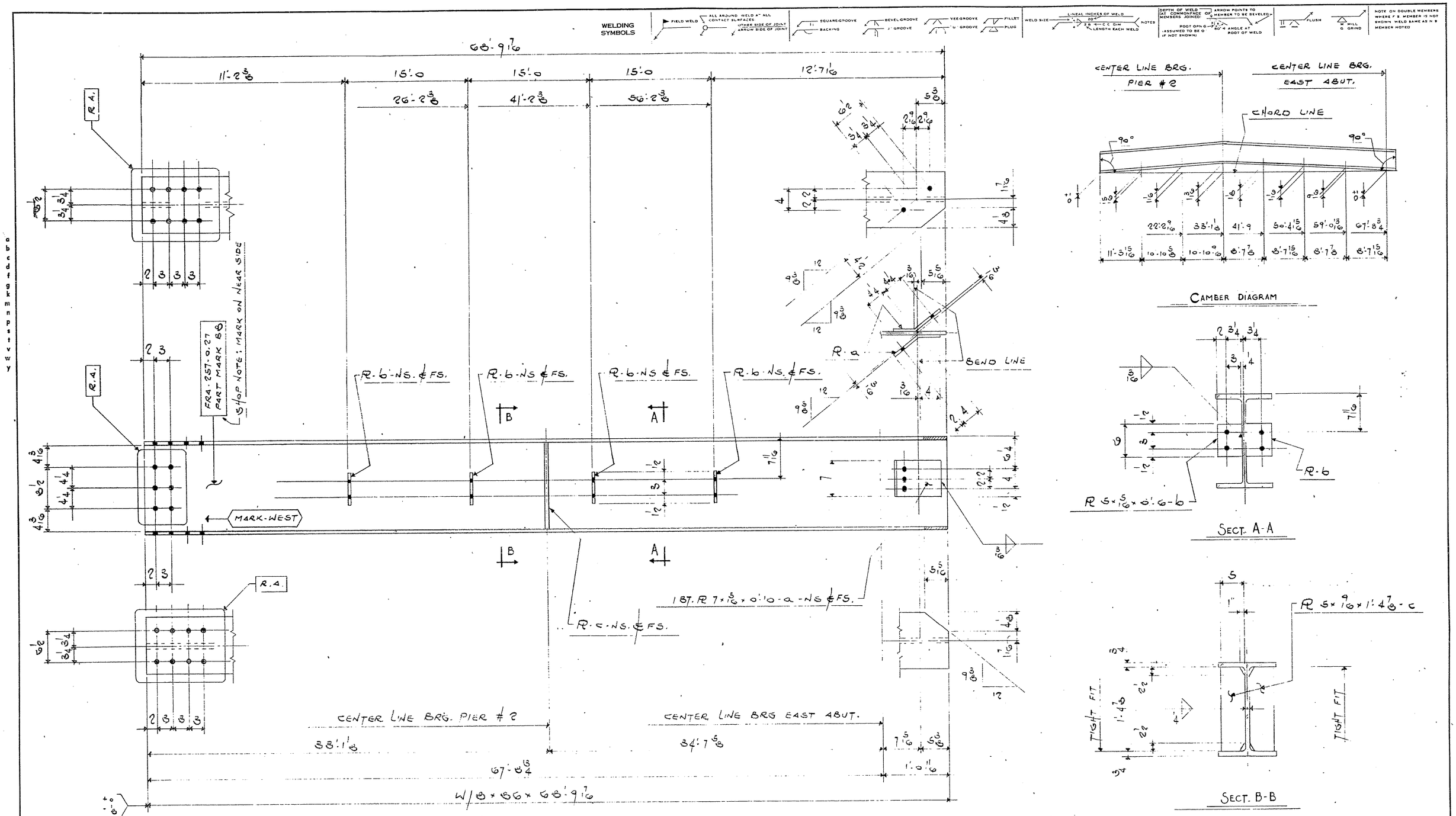

ONE-BEAM-B8

SHOP NOTE:

1.) ALL STEEL TO BE ASTM-A588

2.) SEE SHEET E-1 FOR GENERAL

PROJECT: ENG'R. EST. 1-81

ISSUE		
FOR	NO	DATE
APPROVAL	3	2-18-82
FRA. CO.	3	3-24-82
SHOP	3	3-24-82
CONTR	3	3-24-82

HOWARD PHILLIPS CO.
FRANKLIN CO. ENGINEERING DEPT.
BRIDGE NO. FRA-257-0.27
TWP. RD. 257 OVER BIG RUN CR.
FRANKLIN COUNTY, OHIO

HOLES— 5/8 ϕ

SHOP PAINT NONE

BEAM - B8

THE C. E. MORRIS COMPANY
COLUMBUS, OHIO

MADE BY C.R.H. DATE 2/82
CHECKED BY CEH DATE 2/82

CONT. No. E-3409 SHEET No. 8 OF 14

0290 010 BEAM DETAILS BEAM 8 00027 1981 0277 010

WELDING SYMBOLS

FIELD WELD — ALL AROUND (WELD AT ALL CONTACT SURFACES) — OTHER SIDE OF JOINT — ARROW SIDE OF JOINT — SQUARE-GROOVE — BACKING — BEVEL-GROOVE — J-GROOVE — VEE-GROOVE — U-GROOVE — FILLET — PLUG — WELD SIZE — LINEAL INCHES OF WELD — 20 — 7.8 — C.C. DIM — LENGTH EACH WELD — NOTES — DEPTH OF WELD (AT COMMON FACE OF MEMBERS JOINED) — ROOT OPN G — (ASSUMED TO BE 0" IF NOT SHOWN) — ARROW POINTS TO MEMBER TO BE BEVELED — 50° ANGLE AT ROOT OF WELD — FLUSH — M MILL G GRIND

NOTE: ON DOUBLE MEMBERS WHERE F.S. MEMBER IS NOT SHOWN WELD SAME AS N.S. MEMBER NOTED.

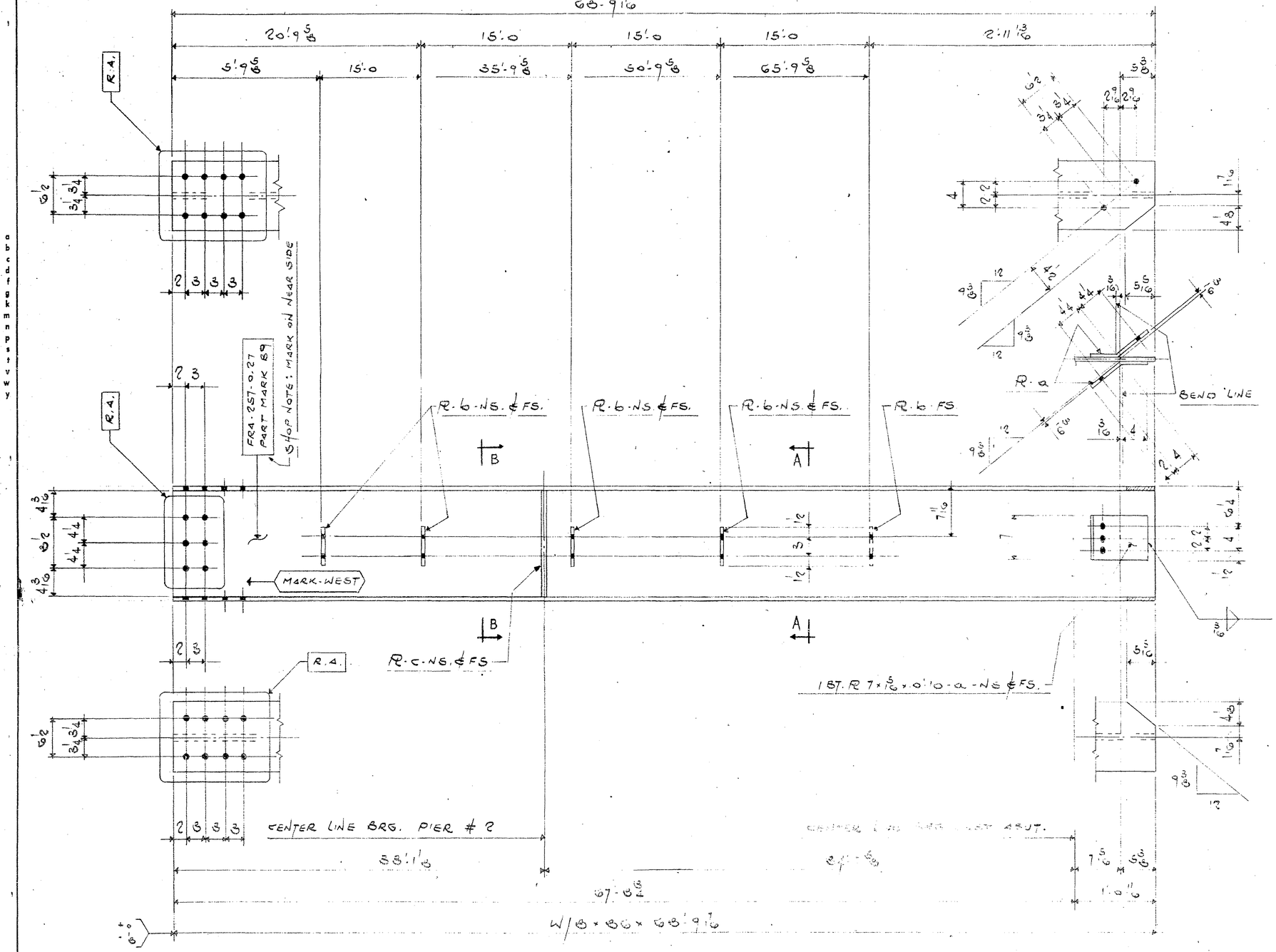

ONE - BEAM - B9

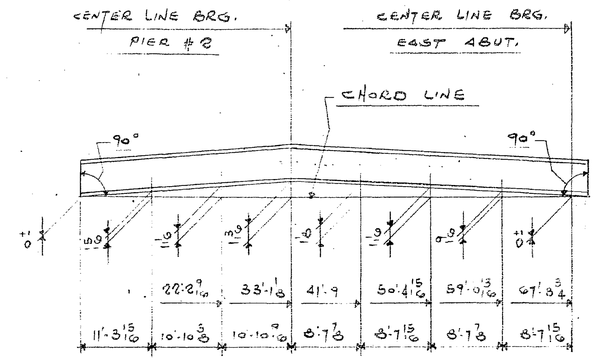

CAMBER DIAGRAM

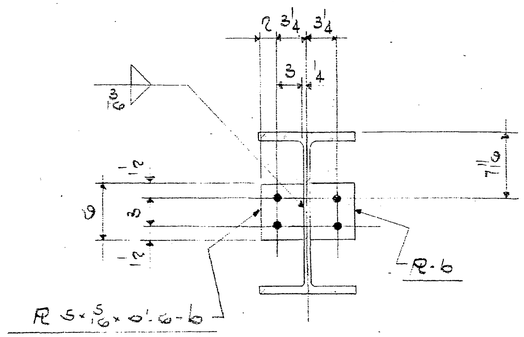

SECT. A-A

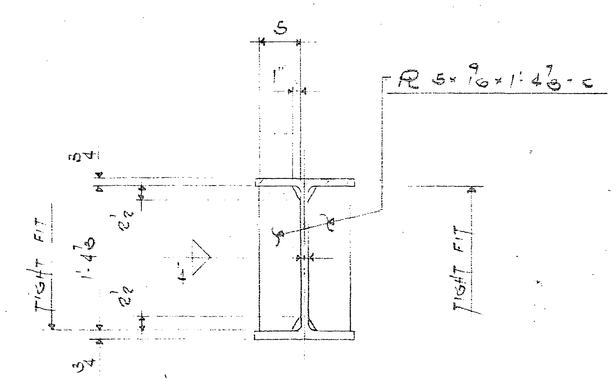

SECT. B-B

SHOP NOTE:

1.) ALL STEEL TO BE ASTM-A588

2.) SEE SHEET E-1 FOR GENERAL

PROJECT: ENGR. EST. # 81

ISSUE		
FOR	NO	DATE
APPROVAL	3	2-18-82
FRA. CO.	3	3-24-82
SHOP	3	3-09-82
CONTR	3	3-24-82

HOWARD PHILLIPS CO.
FRANKLIN CO. ENGINEERING DEPT.
BRIDGE NO. FRA-257-0.27
TWP. RD. 257 OVER BIG RUN CR.
FRANKLIN COUNTY, OHIO

BEAM - B9

THE C. E. MORRIS COMPANY
COLUMBUS, OHIO

MADE BY C.R.H. CHECKED BY CEH
DATE 2/82 DATE 2/82

CONT. NO. C-8469 SHEET NO. 9 OF 14

HOLES — 13/16 ϕ

SHOP PAINT NONE

0290 010 BEAM DETAILS BEAM 9 0027 1981 0278 010

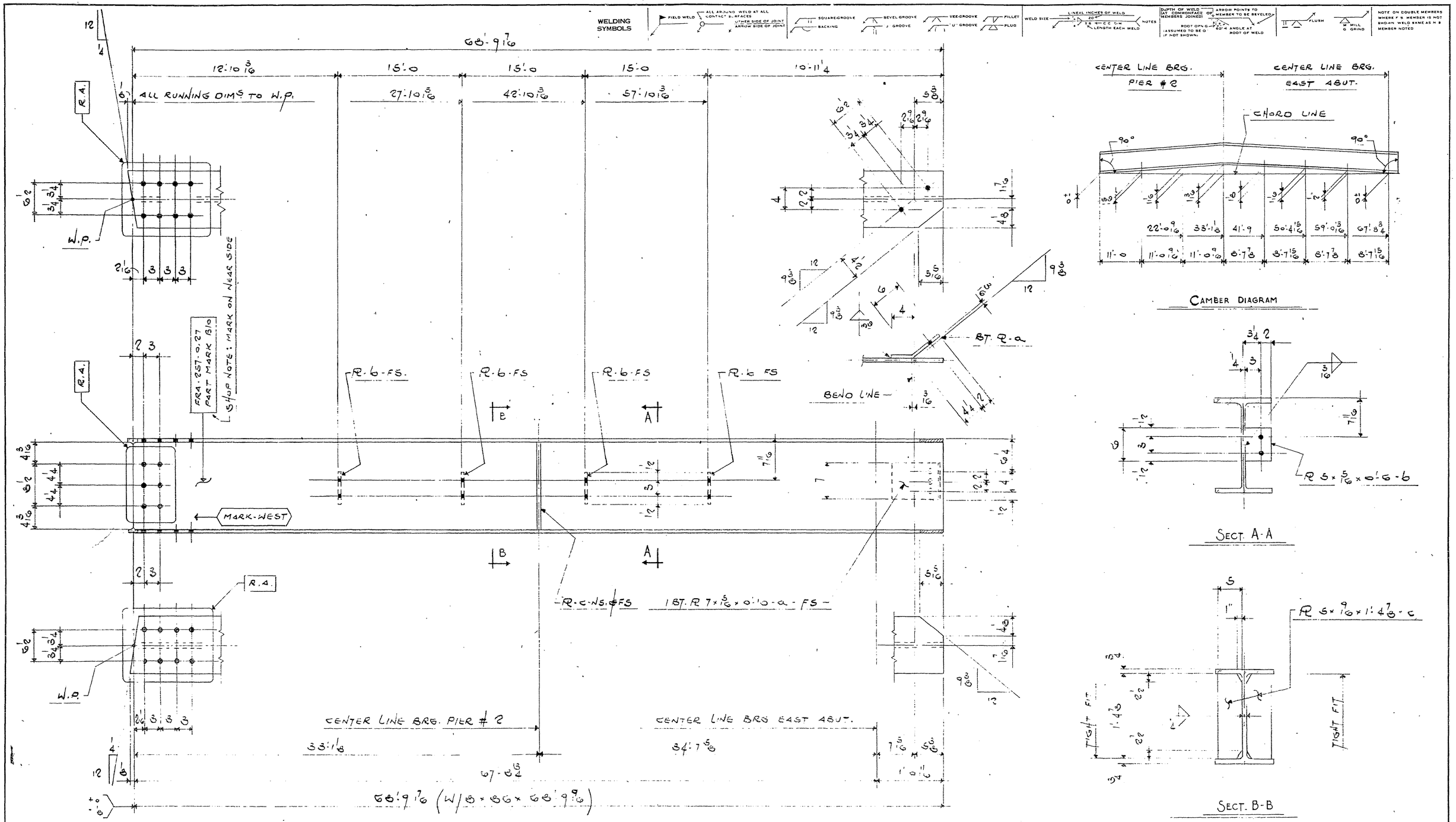

ONE - BEAM - B10

SHOP NOTE:

1.) ALL STEEL TO BE ASTM-A588

2.) SEE SHEET E-1 FOR GENERAL

PROJECT: ENG'R. EST. 1-81

ISSUE		
FOR	NO	DATE
APPROVAL	3	2-18-82
FRA. CO.	3	3-24-82
SHOP	3	3-09-82
CONTR.	3	3-24-82

HOWARD PHILLIPS CO.
FRANKLIN CO. ENGINEERING DEPT.
BRIDGE NO. FRA-257-0.27
TWP. RD. 257 OVER BIG RUN CR.
FRANKLIN COUNTY OHIO

HOLES — 15/16 ϕ

SHOP PAINT NONE

BEAM - B10

THE C. E. MORRIS COMPANY
COLUMBUS, OHIO

MADE BY C.R.H. DATE 2/82
CHECKED BY CEH DATE 2/82

CONT. NO. C-8469 SHEET NO. 10 OF 14

02390 010 BEAM DETAILS BEAM 10 00027 19817 02379 010

WELDING SYMBOLS

FIELD WELD — ALL AROUND (WELD AT ALL CONTACT SURFACES) — OTHER SIDE OF JOINT (ARROW SIDE OF JOINT) — SQUARE-GROOVE — BACKING — BEVEL-GROOVE — "J"-GROOVE — VEE-GROOVE — "U"-GROOVE — FILLET — PLUG — WELD SIZE — LINEAL INCHES OF WELD — 20 — 2.5 — C.C. DIM — LENGTH EACH WELD — NOTES — DEPTH OF WELD (AT COMMON FACE OF MEMBERS JOINED) — ROOT OPN G (ASSUMED TO BE 0" IF NOT SHOWN) — ARROW POINTS TO MEMBER TO BE BEVELED — 45° ± ANGLE AT ROOT OF WELD — FLUSH — MILL & GRIND

NOTE: ON DOUBLE MEMBERS WHERE F & S. MEMBER IS NOT SHOWN WELD SAME AS N & E MEMBER NOTED.

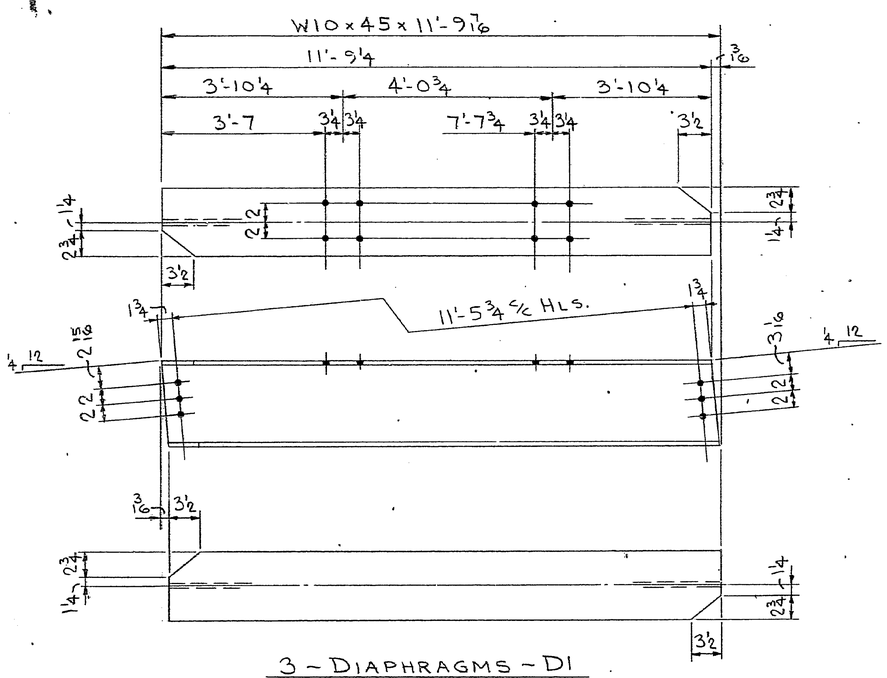

3 - DIAPHRAGMS - D1

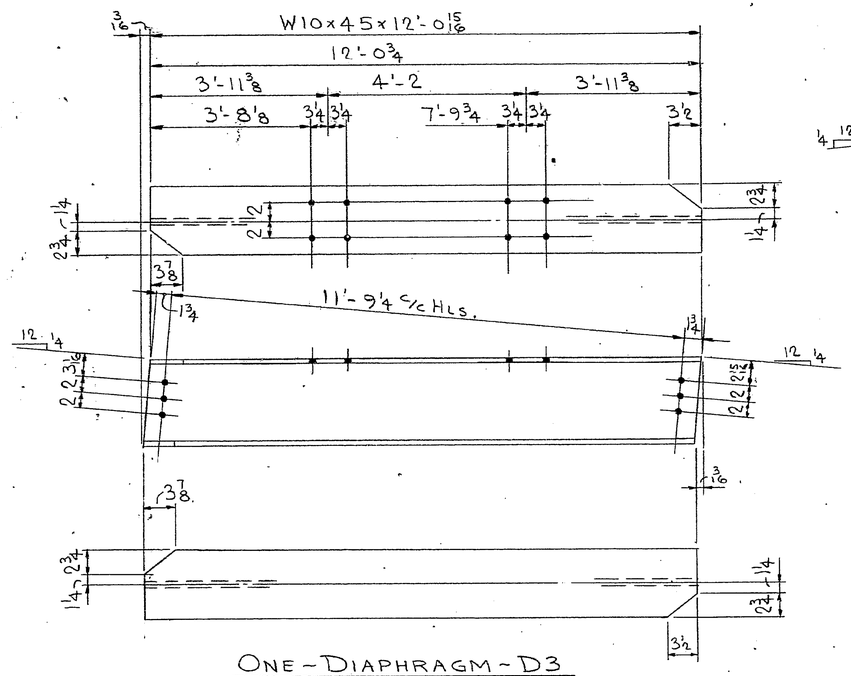

ONE - DIAPHRAGM - D3

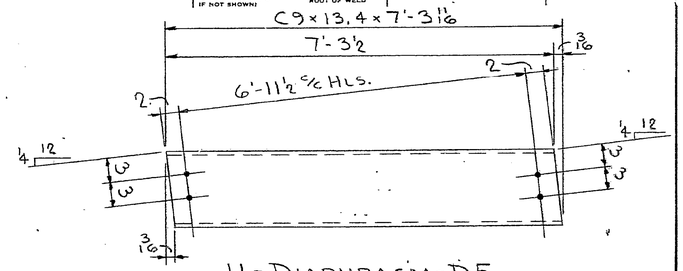

11 - DIAPHRAGM - D5

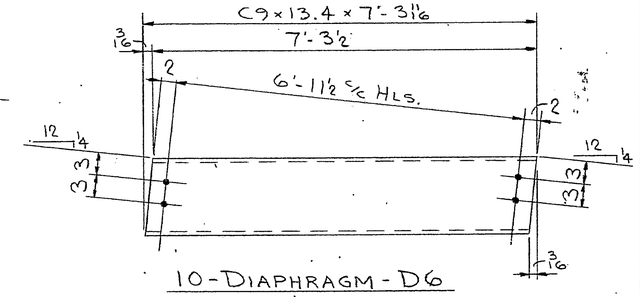

10 - DIAPHRAGM - D6

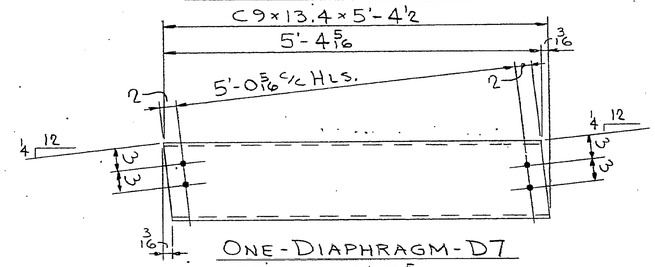

ONE - DIAPHRAGM - D7

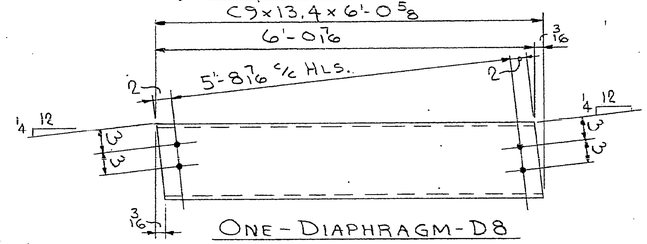

ONE - DIAPHRAGM - D8

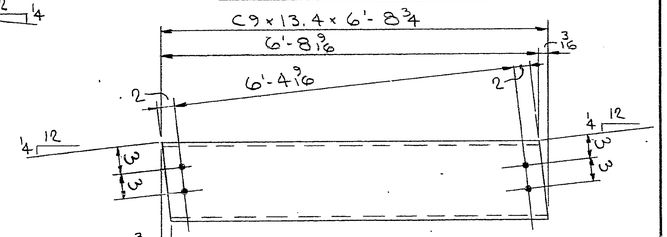

ONE - DIAPHRAGM - D9

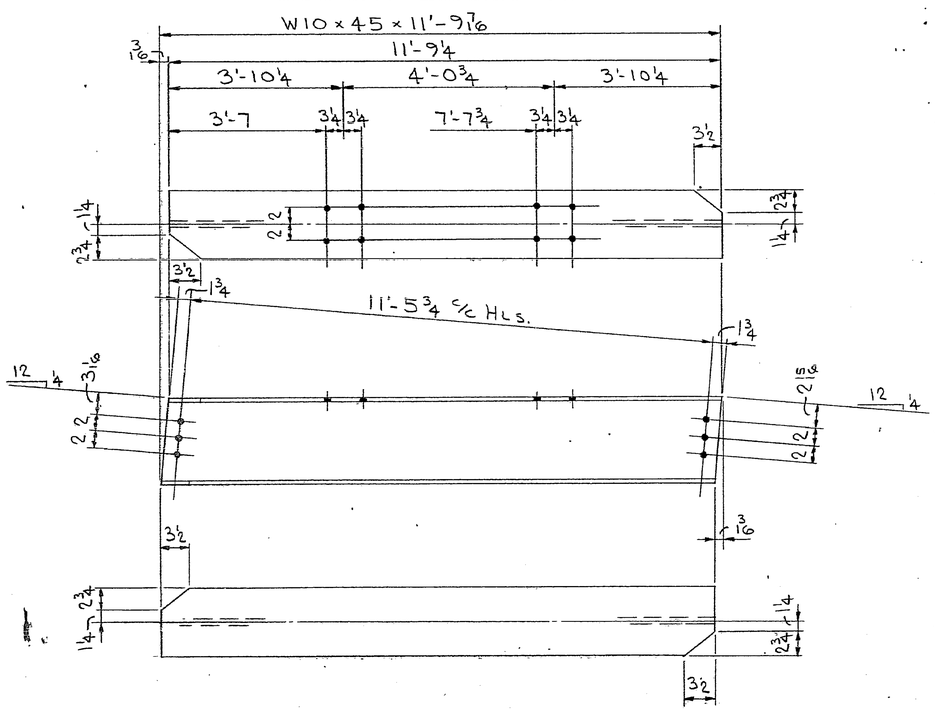

3 - DIAPHRAGMS - D2

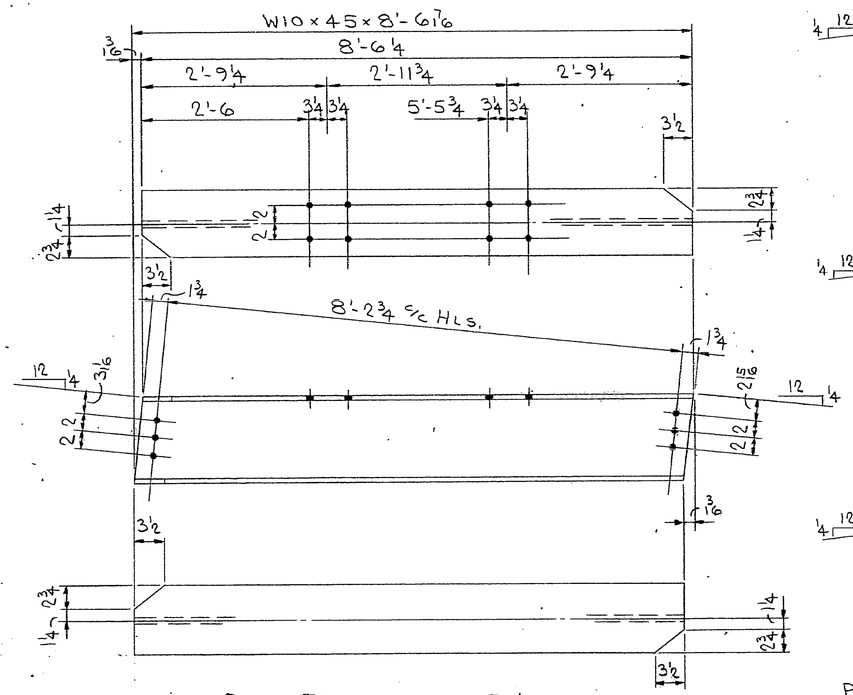

ONE - DIAPHRAGM - D4

ALL STEEL THIS SHT. TO BE ASTM-A588.
SEE SHT. E-1 FOR GENERAL NOTES.

PROJECT: ENG'R. EST. 11-81

ISSUE		
FOR	NO	DATE
APPROVAL	3	2-18-82
FRA. CO.	3	3-24-82
SHOP	3	3-09-82
CONTR.	3	3-24-82

HOWARD PHILLIPS CO.
FRANKLIN CO. ENGINEERING DEPT.
BRIDGE NO. FRA-257-0.27
TWP. RD. 257 OVER BIG RUN CR.
FRANKLIN COUNTY, OHIO

HOLES — 1 1/16" ϕ

SHOP PAINT NONE

DIAPHRAGMS D1 THRU D9

THE C. E. MORRIS COMPANY
COLUMBUS, OHIO

MADE BY C. HAYDEN CHECKED BY C.R.H.
DATE 2/82 DATE 2/82

CONT. NO. C-3469 SHEET NO. 11 OF 14

0290 010 DIAPHRAGMS D1 THRU D9 0027 1981 0280 010

BRUNING 40-135 38597

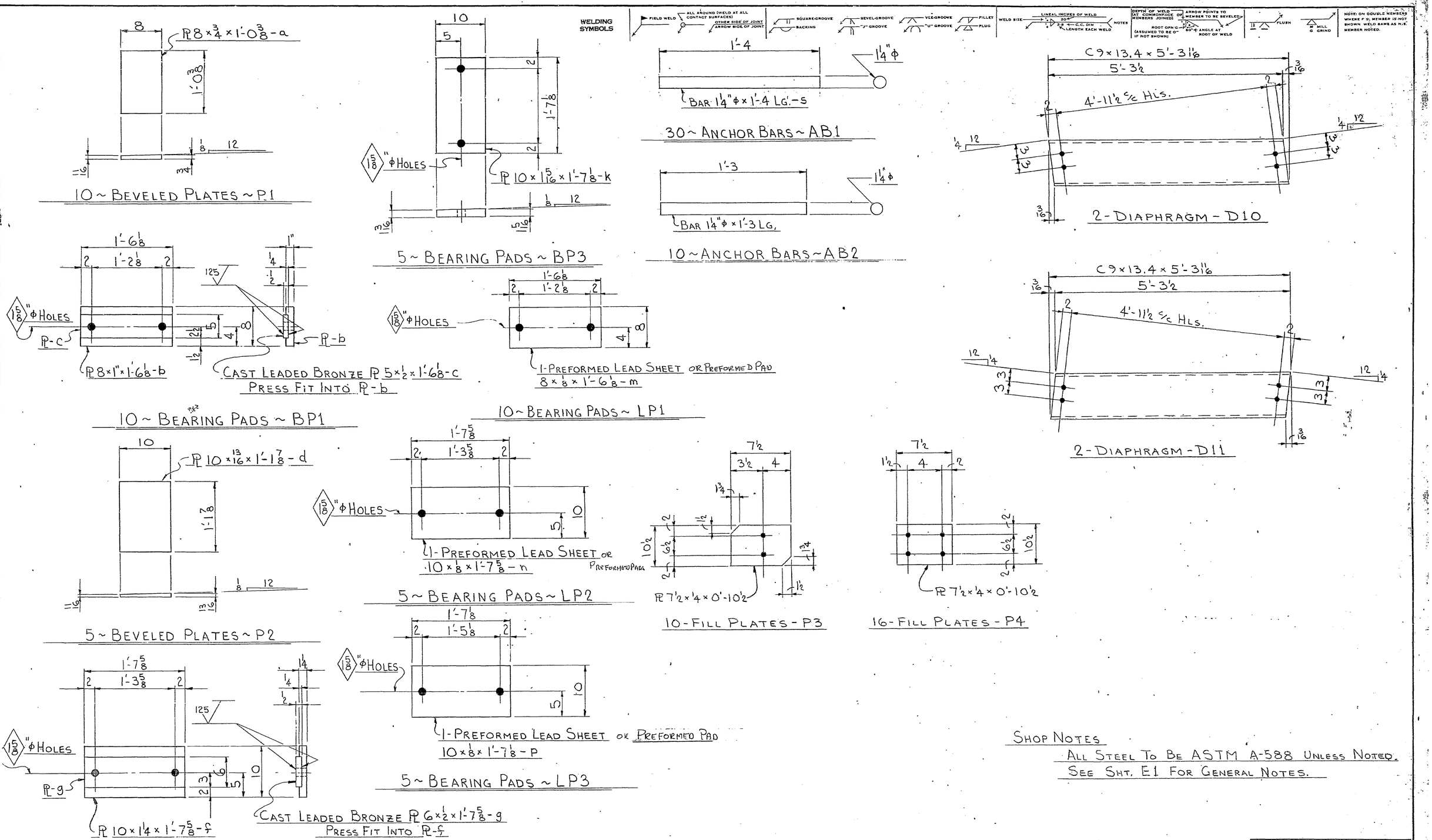

SHOP NOTES

ALL STEEL TO BE ASTM A-588 UNLESS NOTED.

SEE SHT. E1 FOR GENERAL NOTES.

PROJECT Nº ENG. EST. 11-81

ISSUE		
FOR	NO	DATE
APPROVAL	3	2-18-82
FRANKLIN CO.	3	3-24-82
SHOP	3	3-04-82
CONTR.	3	3-24-82

HOLES — 1 5/16" ϕ O.N.

HOWARD PHILLIPS CO.
FRANKLIN CO. ENG. DEPT.
BRIDGE Nº FRA - 257 - 0.27
TWP. RD. 257 OVER BIG. RUN CR.
FRANKLIN CO., OHIO

SHOP PAINT —

BEARINGS, FILL PLS & DIAPHRAGMS

THE C. E. MORRIS COMPANY
COLUMBUS, OHIO

MADE BY T. McCONNEL CHECKED BY CEH
DATE 1/82 DATE 2/82

CONT. No. C3469 SHEET No. 12 of 14

DRAWING 40-135 38657

0290 010 BEARINGS-FILL-DIAPHRAGMS 00027 1981 0281 010

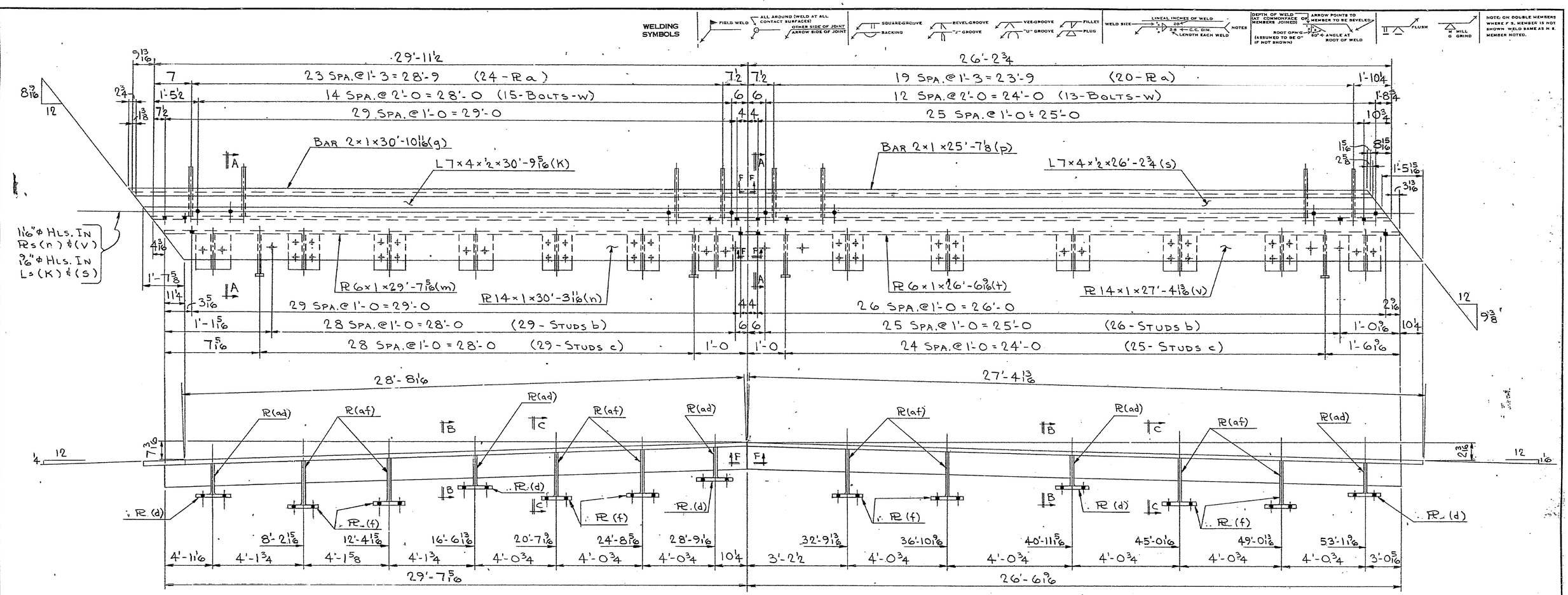

SHOP NOTES:

1. SEE SHT. E-1 FOR GENERAL NOTES.
2. ALL MATERIAL THIS SHT. ASTM-A36 GALVANIZED.

REV. 4, CEH, 3-16-82, REV. END DAM MARKS & CHANGED WT BRACKET TO PL's.

PROJECT: ENG'R. EST. 11-81

ISSUE		
FOR	NO	DATE
APPROVAL	3	2-18-82
FRA. CO.	3	3-24-82
SHOP	3	3/16/82
CONTR.	3	3/24/82

HOLES — AS NOTED

HOWARD PHILLIPS CO.
FRANKLIN CO. ENGINEERING DEPT.
BRIDGE NO. FRA-257-0.27
TWP. RD. 257 OVER BIG RUN CR.
FRANKLIN COUNTY, OHIO

SHOP PAINT GALVANIZED

END DAM ED1 & ED2

THE C. E. MORRIS COMPANY
COLUMBUS, OHIO

MADE BY C. HAYDEN CHECKED BY C.R.H.
DATE 2/82 DATE 2/82

CONT. NO. C-3469 SHEET NO. 13 OF 14

0290 010 END DAMS 1&2 0027 1981 0282 010

BRUNING 40-135 38597

WELDING SYMBOLS

NOTE ON DOUBLE MEMBERS WHERE F.S. MEMBER IS NOT SHOWN: WELD SAME AS N.S. MEMBER NOTED.

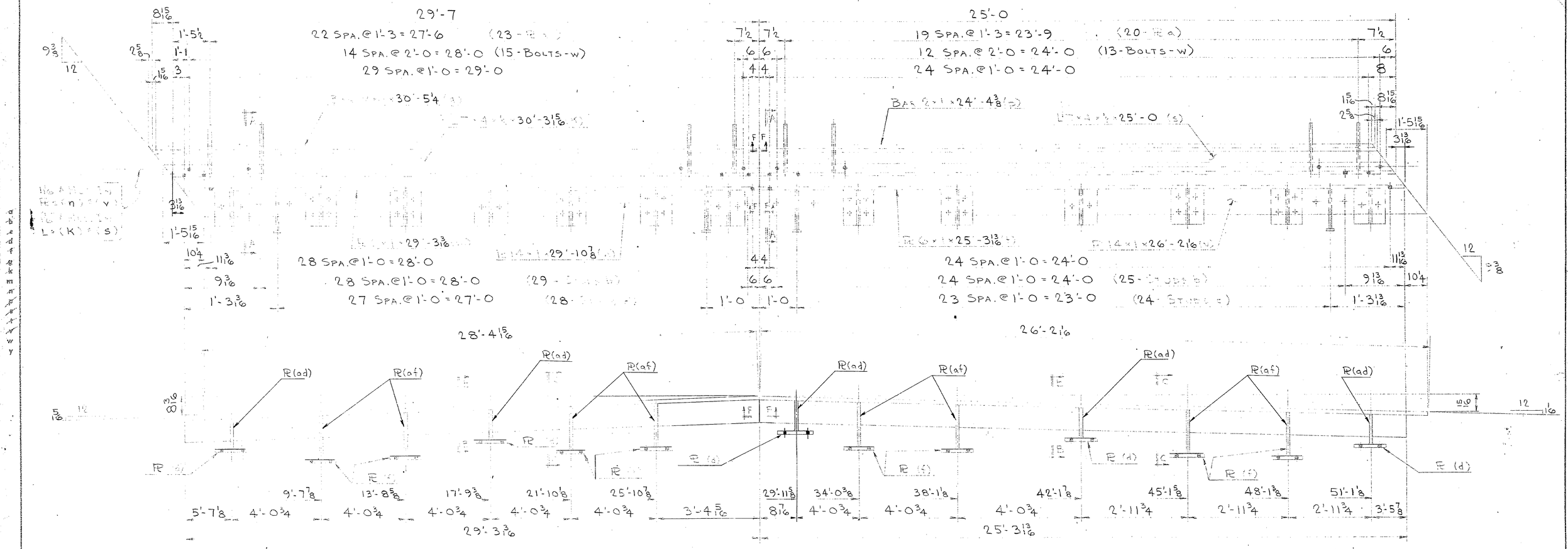

ONE - END DAM - ED3

ONE - END DAM - ED4

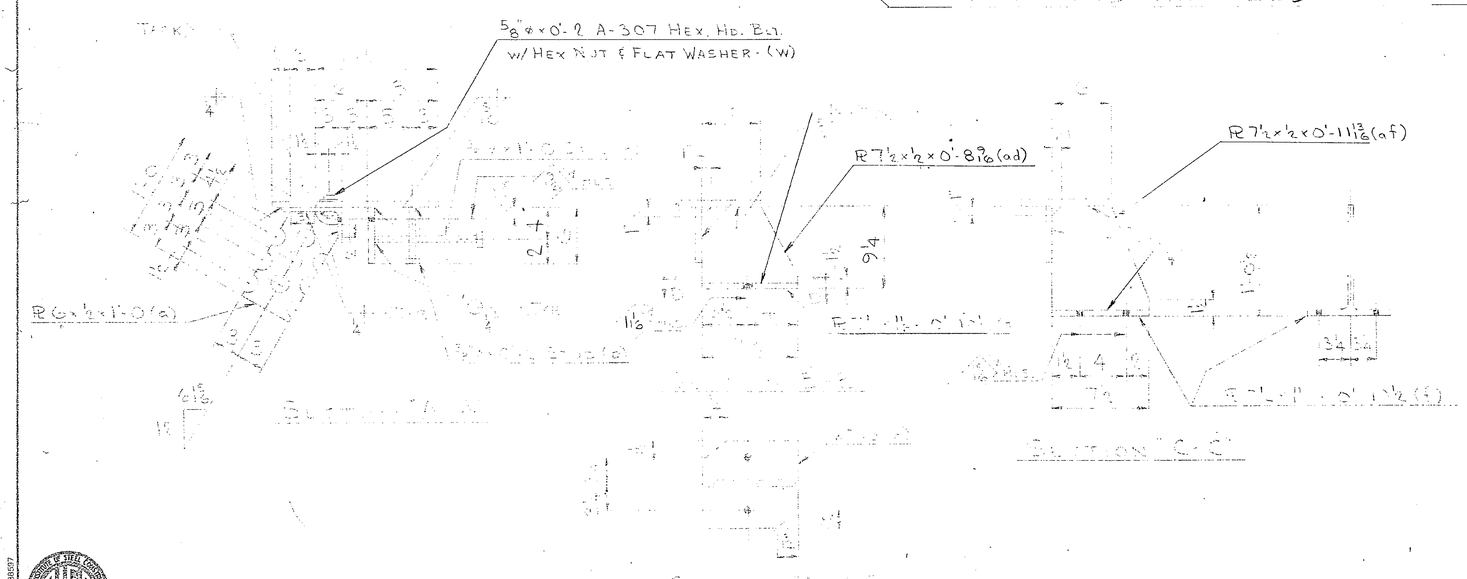

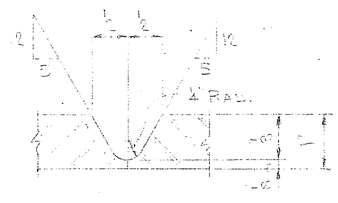

SECTION "F-F"
(PREPARATION FOR FIELD WELD)

SHOP NOTES:

1) SEE SHT. E-1 FOR GENERAL NOTES.
2) ALL MATERIAL THIS SHT. TO BE ASTM-A36 GALVANIZED.

REV. Δ, CEH, 3-16-82, REV. END DAM MARKS & CHANGED WT BRACKET TO PL'S.

PROJECT ENGR. EST. 11-81

ISSUE		
FOR	NO	DATE
APPROVAL	3	2-18-82
FRA. CO.	3	3-24-82
SHOP	3	3/26/82
CONTR.	3	3/24/82

HOLES — AS NOTED

HOWARD PHILLIPS CO.
FRANKLIN CO. ENGINEERING DEPT.
BRIDGE NO. FRA-257-0.27
TWP. RD. 257 OVER BIG RUN CR.
FRANKLIN COUNTY, OHIO

SHOP PAINT

END DAM ED3 & ED4

THE C. E. MORRIS COMPANY
COLUMBUS, OHIO

MADE BY C. HAYDEN CHECKED BY C.R.H.
DATE 2/82 DATE 2/81

CONT NO C-3469 SHEET NO. 14 OF 14

BRIDGE 40-135-38097

0290 010 END DAMS ED4 0027 1781 0283 010

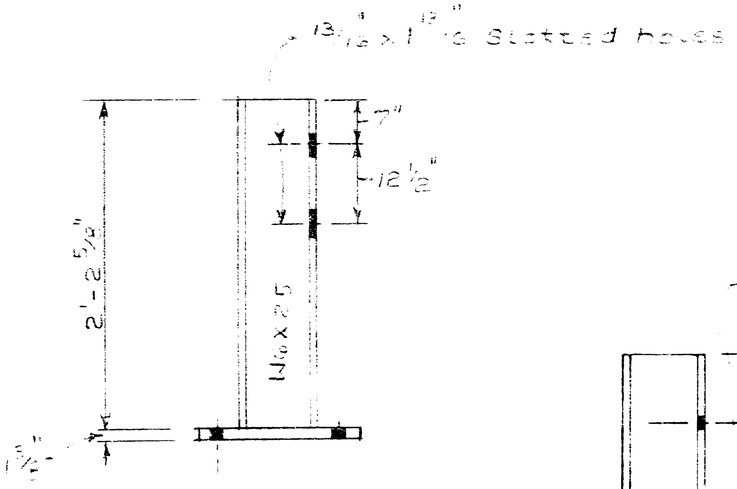

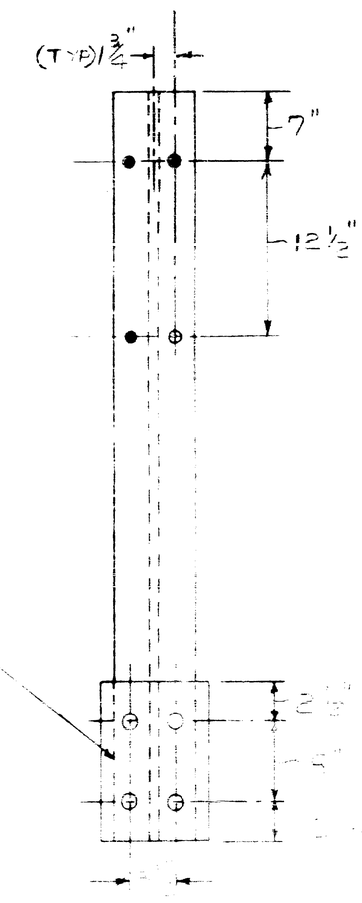

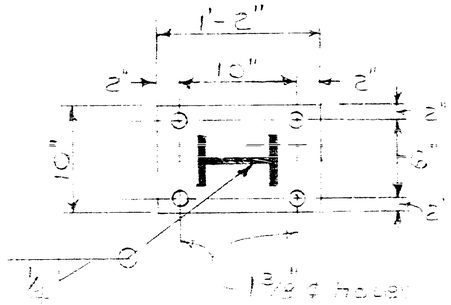

INLET POST
REQ'D 1 EA.

TYPE 1 POST REQ'D 38 EA.

APPROVED

FABRICATION BY
UNITED STEEL FABRICATORS, INC.

0290 010 TYPE 1 BRIDGE POST 0027 0284 1981 010

THE WHITAKER-MERRELL CO.
33 N. HIGH ST.
COLUMBUS, OHIO 43215
TELEPHONE (614) 221-4386

REVISED	PROJECT: BIG RUN RD. FRANKLIN CO.	DR'N.
	TYPE-1 BRIDGE POST	CKD.
		APPV.
	BR NO. FRA-257-0.27 BIG RUN OVER SCIOTO BG. RUN	REF. NO.
CONTRACTOR: HOWARD PHILLIPS, INC.		SHEET 1 of 1