GENERAL NOTES:

1. ALL MATERIALS SHALL CONFORM TO THE STATE OF OHIO DEPARTMENT OF TRANSPORTATION. " CONSTRUCTION AND MATERIAL SPECIFICATIONS, DATED 2016". THE CONTRACT PLANS AND SPECIAL PROVISIONS. GENERAL SHOP PRACTICES, STRUCTURAL FABRICATION, WELDING AND ASSEMBLY SHALL BE GOVERNED BY ANSI/AASHTO/AWS D1.5-05 BRIDGE WELDING CODE.

2. THESE SHOP DRAWINGS ARE PREPARED IN ACCORDANCE WITH THE CONTRACT PLANS AND SPECIFICATIONS. THE D.S. BROWN COMPANY DOES NOT ACCEPT LIABILITY FOR THE DESIGN OF THE PRODUCTS DETAILED IN THESE SHOP DRAWINGS.

3. THE D.S. BROWN COMPANY TO SUPPLY ONLY THE PARTS SHOWN ON THESE DRAWINGS.

4. ALL STEEL SHALL BE PRODUCED IN THE UNITED STATES OF AMERICA.

5. PTFE (TEFLON) SLIDING SURFACE SHALL BE VIRGIN, UNFILLED POLYTETRAFLUOROETHYLENE DIMPLED AND LUBRICATED. PTFE FOR GUIDE BARS SHALL BE VIRGIN, UNFILLED POLYTETRAFLUOROETHYLENE. THE PTFE RESIN SHALL CONFORM TO THE REQUIREMENTS OF ASTM D4894.

6. PTFE IS TO BE PURCHASED ETCHED ON ONE SIDE FOR BONDING INTO MACHINED RECESS. STEEL MATING SURFACES OF PTFE SHALL BE GRIT BLASTED AND DEGREASED PRIOR TO APPLICATION OF ADHESIVE. ADHESIVE SHALL BE APPLIED USING DIRECTIONS SUPPLIED BY THE ADHESIVE MANUFACTURER. CORNERS OF THE PTFE SHALL BE FILLETED TO ACCOMMODATE THE RADIUS OF THE MACHINED RECESS.

7. THE BEARING SHALL BE SUBJECT TO RANDOM IN-HOUSE ELASTOMER TESTING AND IN-HOUSE PROOF LOAD TESTING IN ACCORDANCE WITH AASHTO DIVISION I, SECTION 14 (METHOD "B") AND AASHTO DIVISION II, SECTION 18.

8. ALL MATERIAL SHALL HAVE TOTAL TRACEABILITY.

9. FILL INDENTATIONS OR GROOVES ON THE EXTERIOR SURFACE OF THE BEARINGS CAUSED EXTERNAL LAMINATE RESTRAINING DEVICES TO A 1/8" MINIMUM COVER BY A REVULCANIZED PATCH; OR BY A SILICON CAULK CONFORMING TO FEDERAL SPECIFICATIONS TT-S-001543A OR AN APPROVED EQUAL.

10. VERSIFLEX ELASTOMERIC BEARING MANUFACTURING FACILITY AND REPRESENTATIVE FOR COORDINATING PRODUCTION:
THE D.S. BROWN COMPANY
300 EAST CHERRY STREET
NORTH BALTIMORE, OHIO 45872
ATTN.: ERIC JOHNSON 419-257-3561

MARKING NOTES:

1. ALL BEARING SHALL BE SHOP MARKED PRIOR TO SHIPPING WITH THE FOLLOWING INFORMATION: LOCATION ON THE BRIDGE (PIER OR ABUTMENT), DIRECTION ARROW THAT POINTS UP STATION & THICKER EDGE OF LOAD PLATE. ALL MARKING SHALL BE PERMANENT AND BE VISIBLE AFTER THE BEARING IS INSTALLED.

TESTING NOTES:

1. OTHER TESTING SHALL BE IN COMPLIANCE WITH ODOT CMS SECTION 711.

AREAS TO BE PAINTED:

1. ALL MILL SCALE SHALL BE REMOVED FROM BEARINGS BY SANDBLASTING (SSPC-SP10) PRIOR TO APPLYING PROTECTIVE COATING.

2. EXTERNAL STEEL SHALL BE COATED WITH PRIMER: (A)
PRIMER - SHERWIN-WILLIAMS ZINC CLAD DOT @ 2-4 MILS D.F.T.
PAINT TO BE SAMPLED AND APPROVED AT THE MANUFACTURER (TE-24).
PAINT TO BE ON THE QUALIFIED PRODUCTS LIST.

3. SEE COATING LIMIT DETAILS FOR COATING LOCATIONS.

4. ALL MATERIAL TO HAVE TOTAL TRACEABILITY.

AREAS TO BE METALLIZED:

1. ALL MILL SCALE SHALL BE REMOVED FROM BEARINGS BY SANDBLASTING (SSPC-SP10) PRIOR TO APPLYING PROTECTIVE COATING. STEEL GRIT SHALL BE UTILIZED TO IMPART AN ANGULAR SURFACE PROFILE OF 2.5 MILS MINIMUM.

2. GRIND FLAME CUT EDGES TO REMOVE THE CARBONIZED SURFACE PRIOR TO BLASTING.

3. ALL SURFACES TO BE COATED SHALL BE METALIZED IN ACCORDANCE WITH SSPC-CS23.00 TO A DFT OF 12 TO 14 MILS. WIRE FOR THE METALIZED PRIMER SHALL MEET ASTM B833 AND CONSIST OF 99.99% MIN. ZINC - UNS(Z13005) COMPOSITION. USE THE ARC SPRAY APPLICATION METHOD.

4. SEE COATING LIMIT DETAILS FOR COATING LOCATIONS.

5. ALL MATERIAL TO HAVE TOTAL TRACEABILITY.

CONTRACTOR NOTES:

1. WELDING PROCEDURES SHALL BE ESTABLISHED BY THE CONTRACTOR TO RESTRICT THE MAXIMUM TEMPERATURE REACHED BY BONDED PTFE SURFACES TO 300°F (149°C) AND 200°F (93°C) FOR SURFACES IN CONTACT WITH THE ELASTOMER. TEMPERATURES SHALL BE DETERMINED BY TEMPERATURE INDICATING WAX PENCILS OR OTHER SUITABLE MEANS.

2. AFTER HANDLING AND INSTALLATION IS COMPLETE, METALIZE OR PRIMER SURFACES SHALL BE TOUCHED UP AS NECESSARY IN ACCORDANCE WITH THE PROJECT SPECIFICATIONS. PROTECT STAINLESS STEEL AND PTFE FROM BLAST ABRASIVES, AND WELD SPATTER.

3. BEARINGS ARE TO BE SHIPPED AS COMPLETE UNITS, STEEL BANDED, AND SHALL BE WRAPPED TO PROTECT FROM MOISTURE AND DIRT DURING TRANSIT AND STORAGE. BEARINGS SHALL BE STORED IN A CLEAN, DRY, LEVEL UPRIGHT POSITION WHILE AT JOBSITE. BEARINGS SHALL BE LIFTED FROM THEIR UNDERSIDES ONLY.

4. CARE SHALL BE EXERCISED BY THE CONTRACTOR TO PROTECT THE STAINLESS STEEL AND PTFE SLIDING SURFACES FROM DAMAGE AT ALL TIMES. THE PTFE SHALL BE PROTECTED FROM DIRECT EXPOSURE TO ULTRAVIOLET RAYS AT ALL TIMES.

TOLERANCE TABLE

DESCRIPTION	TOLERANCE (INCHES U.N.O.)
ELASTOMERIC BEARING DESIGN THICKNESS ≤ 1.250"	-0, +0.1181
ELASTOMERIC BEARING DESIGN THICKNESS > 1.250"	-0, +0.2362
ELASTOMERIC BEARING PLAN DIMENSIONS ≤ 36"	-0, +0.2362
ELASTOMERIC BEARING PLAN DIMENSIONS > 36"	-0, +0.4724
THICKNESS OF INDIVIDUAL LAYERS OF ELASTOMER	±0.1181
VARIATION FROM A PLANE PARALLEL TO THE	
TOP & BOTTOM	±0.005 RAD
SIDES	±0.2362
POSITION OF EXPOSED CONNECTION MEMBERS	±0.1181
ELASTOMERIC EDGE COVER	-0, +0.1181
ELASTOMERIC BEARING HOLE OR SLOT SIZE	±0.1181
ELASTOMERIC BEARING HOLE OR SLOT LOCATION	±0.1181
STEEL PLATE THICKNESS	±0.063
STEEL PLATE PLAN DIMENSIONS ≤ 30"	±0.250
STEEL PLATE PLAN DIMENSIONS > 30"	±0.250
STEEL PLATE FLATNESS IN CONTACT WITH BEARING	0.001 X NOM. DIMENSION
STEEL PLATE FLATNESS: GROUT OR CONCRETE SIDE	0.005 X NOM. DIMENSION
STEEL PLATE FLATNESS: STEEL GIRDER SIDE	0.002 X NOM. DIMENSION
STEEL PLATE FLATNESS: STEEL PLATE SIDE	0.001 X NOM. DIMENSION
STEEL PLATE SURFACE FINISH IN CONTACT WITH	125 μ" RMS
BEVEL SLOPE	±0.002 RAD
GUIDE BAR CONTACT SURFACE: DIMENSION	-0.000, +0.125
GUIDE BAR CONTACT SURFACE: FLATNESS	0.001 X NOM. DIMENSION
GUIDE BAR CONTACT SURFACE: SURFACE FINISH	32 μ" RMS
GUIDE BAR PARALLELISM	±0.005 RAD
DISTANCE BETWEEN GUIDE BARS	-0.000, +0.030
STAINLESS STEEL THICKNESS	-0.000, +0.063
STAINLESS STEEL PLAN DIMENSIONS	-0.000, +0.125
STAINLESS STEEL FLATNESS	0.001 X NOM. DIMENSION
STAINLESS STEEL SURFACE FINISH: SLIDING SURFACE	MIRROR #8
PTFE THICKNESS	-0.000, +0.063
PTFE PLAN DIMENSIONS	-0.000, +0.030
PTFE FLATNESS	0.001 X NOM. DIMENSION
NOTE: SURFACE FINISH & FLATNESS TOLERANCES ARE PRIOR TO COATING.	

STATE OF OHIO
DAVID F. TRAINI
E-48751
REGISTERED
PROFESSIONAL ENGINEER

David F. Traini

SHOP DRAWING REVIEW

REVIEW IS FOR GENERAL COMPLIANCE WITH CONTRACT DOCUMENTS NO RESPONSIBILITY ASSUMED FOR CORRECTNESS OF DIMENSIONS OR DETAILS

NO EXCEPTIONS TAKEN	X
MAKE CORRECTIONS NOTED	
AMEND & RESUBMIT	
REJECTED – SEE REMARKS	

E.L. ROBINSON ENGINEERING
Date 11-30-18 By Dave Traini

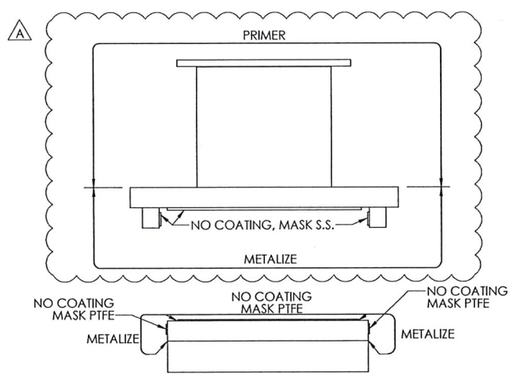

BOLSTER ELASTOMERIC BEARING COATING LIMITS

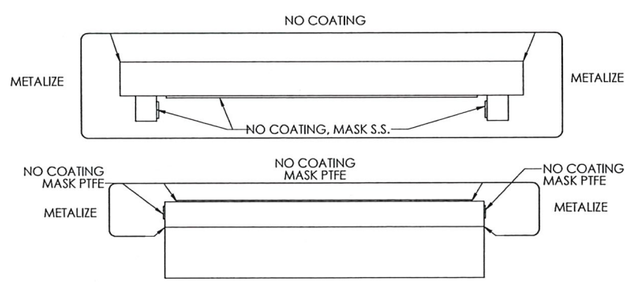

SLIDING ELASTOMERIC BEARING COATING LIMITS

REV.	DESCRIPTION	DATE	DET.	CKD.
A	REVISED COATING LIMITS AND PRIMER TYPE	11/27/18	JAK	EAK

D.S. BROWN
A GIBRALTAR INDUSTRIES COMPANY
THE D.S. BROWN COMPANY
300 E. CHERRY STREET
NORTH BALTIMORE, OHIO 45872
419.257.3561
FAX: 419.257.0332
WWW.DSBROWN.COM

LOCATION — BRIDGE OVER NORFOLK SOUTHERN RAILROAD
BRIDGE NO. — FRA-CR27-0785
PID NO. — 15125
—
P.O. NO. — 18-25-DSB
DESIGNER — E.L. ROBINSON ENGINEERING
CUSTOMER — OHIO STRUCTURES, INC.

DESCRIPTION:
GENERAL NOTES
FRANKLIN COUNTY, OHIO

SCALE:	DRAWN BY:	CHECKED BY:	DATE:	
N.T.S.	DJA	EAK	11/18	-
PROJECT NUMBER:	PROJECT CODE:	UNITS:	SHEET:	
1056508	1104	INCHES	GN1	

FILE SAVED: 11/28/18 10:29:14 AM

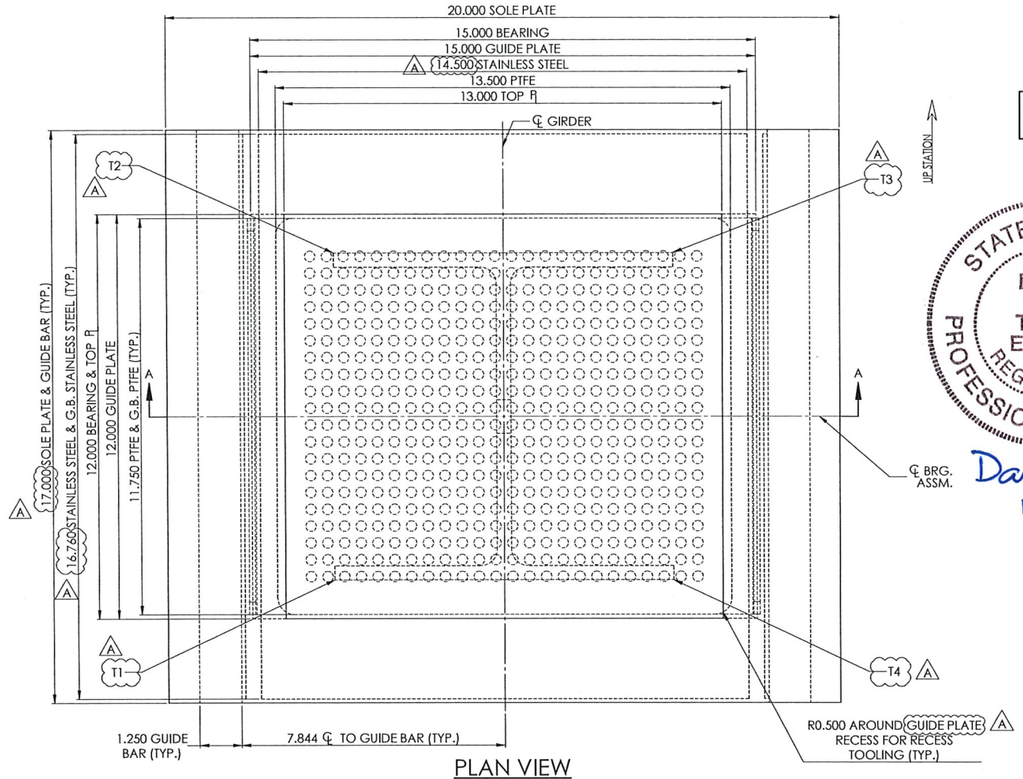

PLAN VIEW
(SEE ASSEMBLY SCHEDULE)

FIELD DRILL VENT HOLE IN TOP PL

STATE OF OHIO
DAVID F. TRAINI
E-48751
REGISTERED
PROFESSIONAL ENGINEER

David F. Traini
11-30-18

ASSEMBLY SCHEDULE			
MK	LOCATION	QTY.	H
1A	REAR ABUT., BEAM 1	1	2.301
1B	REAR ABUT., BEAM 2	1	16.515
1C	REAR ABUT., BEAM 3	1	17.296
1D	REAR ABUT., BEAM 4	1	15.140
1E	REAR ABUT., BEAM 5	1	13.015
1F	FWD ABUT., BEAM 1	1	13.015
1G	FWD ABUT., BEAM 2	1	15.890
1H	FWD ABUT., BEAM 3	1	17.952
1J	FWD ABUT., BEAM 4	1	17.140
1K	FWD ABUT., BEAM 5	1	16.296
1SA	SAMPLE W/O EXTERNAL STEEL	1	

HP10X40 SCHEDULE						
MK	QTY.	T1	T2	T3	T4	CPT
hp1	1	8.938	9.000	9.000	8.938	8.969
hp2	1	10.437	10.563	10.563	10.437	10.500
hp3	1	11.250	11.312	11.312	11.250	11.281
hp4	1	9.062	9.188	9.188	9.062	9.125
hp5	1	6.937	7.063	7.063	6.937	7.000
hp6	1	7.188	6.812	6.812	7.188	7.000
hp7	1	10.062	9.688	9.688	10.062	9.875
hp8	1	12.125	11.750	11.750	12.125	11.938
hp9	1	11.312	10.938	10.938	11.312	11.125
hp10	1	10.438	10.125	10.125	10.438	10.281

SHOP DRAWING REVIEW

REVIEW IS FOR GENERAL COMPLIANCE WITH CONTRACT DOCUMENTS NO RESPONSIBILITY ASSUMED FOR CORRECTNESS OF DIMENSIONS OR DETAILS

NO EXCEPTIONS TAKEN	X
MAKE CORRECTIONS NOTED	
AMEND & RESUBMIT	
REJECTED – SEE REMARKS	

E.L. ROBINSON ENGINEERING
Date 11-30-18 By Dal Traini

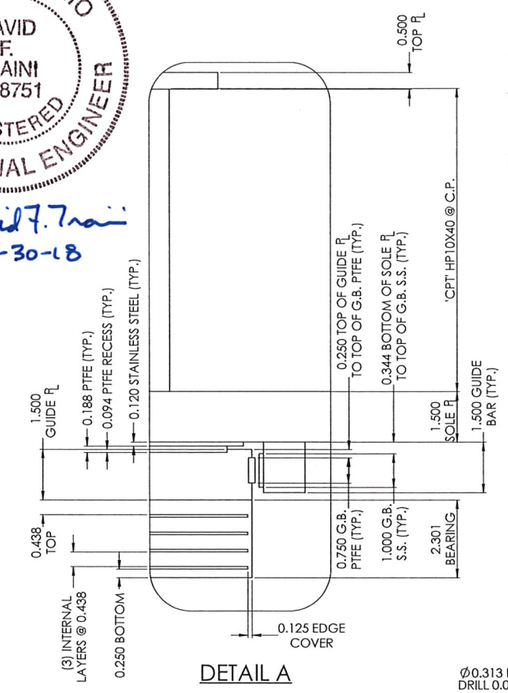

DETAIL A

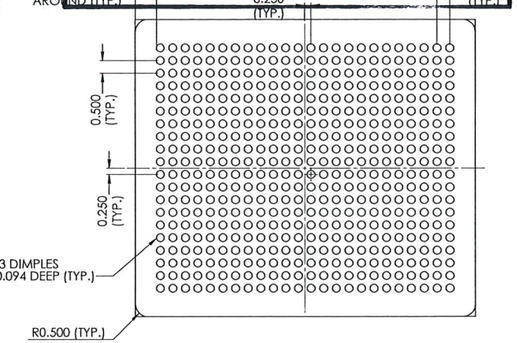

PTFE DIMPLE DETAIL

NOTE (480)-Ø0.313" DIMPLES SHALL BE UNIFORMLY DISTRIBUTED WITHIN THE AREA NOT LESS THAN 0.500" FROM THE EDGE AND OCCUPY BETWEEN 20% & 30% OF THE PTFE AREA

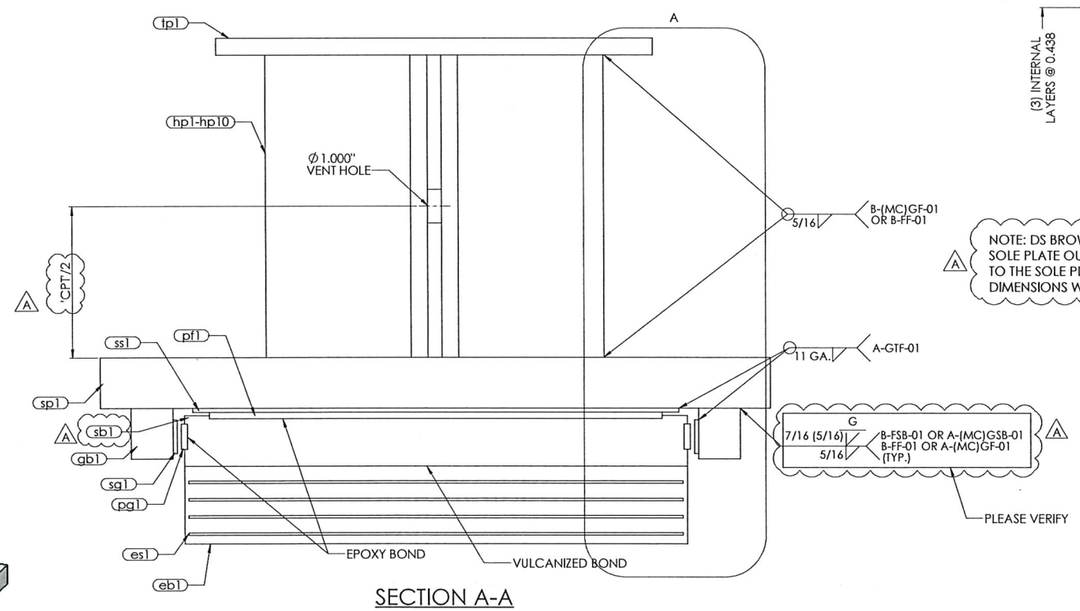

SECTION A-A

NOTE: DS BROWN RESERVES THE RIGHT TO MACHINE THE GUIDE BARS AND SOLE PLATE OUT OF ONE PIECE OF STEEL IN LIEU OF WELDING THE GUIDE BARS TO THE SOLE PLATE. IF THE GUIDE BARS ARE MADE INTEGRAL, THE GUIDE BAR DIMENSIONS WILL EXTEND TO THE OUTSIDE EDGE OF THE SOLE PLATE.

SEE SHEET GN1 FOR GENERAL NOTES.

VERTICAL LOADS (KIPS)		
DL	LL	MAX. DESIGN LOAD (DL+LL)
87.0	62.0	149

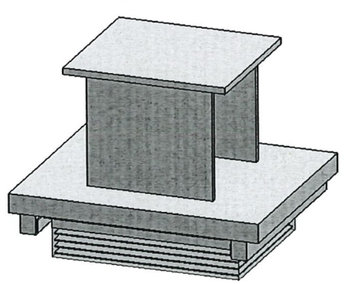

REV.	DESCRIPTION	DATE	DET.	CKD.
A	REVISED SOLE PLATE, GUIDE BAR, STAINLESS STEEL DIMENSIONS, NOTES & LABLES	11/27/18	JAK	EAK

D.S. BROWN
A GIBRALTAR INDUSTRIES COMPANY
THE D.S. BROWN COMPANY
300 E. CHERRY STREET
NORTH BALTIMORE, OHIO 45872
419.257.3561
FAX: 419.257.0332
WWW.DSBROWN.COM

LOCATION — BRIDGE OVER NORFOLK SOUTHERN RAILROAD
BRIDGE NO. — FRA-CR27-0785
BIN — 15125
—
P.O. NO. — 18-25-DSB
DESIGNER — E.L. ROBINSON ENGINEERING
CUSTOMER — OHIO STRUCTURES, INC.

DESCRIPTION:
VERSIFLEX ELASTOMERIC BEARING
FRANKLIN COUNTY, OHIO

SCALE:	DRAWN BY:	CHECKED BY:	DATE:	
N.T.S.	DJA	EAK	11/18	-
PROJECT NUMBER	PROJECT CODE	UNITS	SHEET	
1056508	1104	INCHES	01	

FILE SAVED: 11/28/18 10:40:51 AM

NO.	MK	QTY.	Thick	Dia.	Width	Length	Part	Material	Coating	Remarks	WT	Oracle Seed
1	1A	1					VERSIFLEX ELASTOMERIC BEARING				334.6	1104-A^
1.1	eb1	1	2.301		15.000	12.000	Elastomeric Bearing	60+/-5 DURO GR. 3 Neoprene	Plain		19.7	
1.2	es1	4	14 GA.		14.750	11.750	Shim (internal)	A1011 GR. 36	Plain		3.7	
1.3	pf1	1	0.188		13.500	11.750	PTFE	PURE VIRGIN UNFILLED	Plain	DIMPLED & LUBRICATED	2.4	
1.4	sb1	1	1.500		15.000	12.000	Plate	A709 GR. 50 OR 50W	Metalize		71.9	
1.5	sp1	1	1.500		20.000	17.000	Plate	A709 GR. 50 OR 50W	Metalize, Paint		144.6	
1.6	ss1	1	11 GA.		14.500	16.760	Plate	A240 T304, #8 & 2B	Plain		8.3	
1.7	hp1	1				9.000	HP10x42	A709 GR. 50, 50W OR A992	Paint		31.3	
1.8	tp1	1	0.500		13.000	12.000	Plate	A709 GR. 50 OR 50W	Paint		22.1	
1.9	gb1	2	1.500		1.250	17.000	Plate	A709 GR. 50 OR 50W	Metalize		9.0	
1.10	sg1	2	11 GA.		1.000	16.760	Plate	A240 T304, #8 & 2B	Plain		0.6	
1.11	pg1	2	0.188		0.750	11.750	GB PTFE	PURE VIRGIN UNFILLED	Plain		0.1	
2	1B	1					VERSIFLEX ELASTOMERIC BEARING				339.9	1104-A^
2.1	eb1	1	2.301		15.000	12.000	Elastomeric Bearing	60+/-5 DURO GR. 3 Neoprene	Plain		19.7	
2.2	es1	4	14 GA.		14.750	11.750	Shim (internal)	A1011 GR. 36	Plain		3.7	
2.3	pf1	1	0.188		13.500	11.750	PTFE	PURE VIRGIN UNFILLED	Plain	DIMPLED & LUBRICATED	2.4	
2.4	sb1	1	1.500		15.000	12.000	Plate	A709 GR. 50 OR 50W	Metalize		71.9	
2.5	sp1	1	1.500		20.000	17.000	Plate	A709 GR. 50 OR 50W	Metalize, Paint		144.6	
2.6	ss1	1	11 GA.		14.500	16.760	Plate	A240 T304, #8 & 2B	Plain		8.3	
2.7	hp2	1				10.563	HP10x42	A709 GR. 36, 50 OR 50W	Paint		36.7	
2.8	tp1	1	0.500		13.000	12.000	Plate	A709 GR. 50 OR 50W	Paint		22.1	
2.9	gb1	2	1.500		1.250	17.000	Plate	A709 GR. 50 OR 50W	Metalize		9.0	
2.10	sg1	2	11 GA.		1.000	16.760	Plate	A240 T304, #8 & 2B	Plain		0.6	
2.11	pg1	2	0.188		0.750	11.750	GB PTFE	PURE VIRGIN UNFILLED	Plain		0.1	
3	1C	1					VERSIFLEX ELASTOMERIC BEARING				342.7	1104-A^
3.1	eb1	1	2.301		15.000	12.000	Elastomeric Bearing	60+/-5 DURO GR. 3 Neoprene	Plain		19.7	
3.2	es1	4	14 GA.		14.750	11.750	Shim (internal)	A1011 GR. 36	Plain		3.7	
3.3	pf1	1	0.188		13.500	11.750	PTFE	PURE VIRGIN UNFILLED	Plain	DIMPLED & LUBRICATED	2.4	
3.4	sb1	1	1.500		15.000	12.000	Plate	A709 GR. 50 OR 50W	Metalize		71.9	
3.5	sp1	1	1.500		20.000	17.000	Plate	A709 GR. 50 OR 50W	Metalize, Paint		144.6	
3.6	ss1	1	11 GA.		14.500	16.760	Plate	A240 T304, #8 & 2B	Plain		8.3	
3.7	hp3	1				11.312	HP10x42	A709 GR. 36, 50 OR 50W	Paint		39.4	
3.8	tp1	1	0.500		13.000	12.000	Plate	A709 GR. 50 OR 50W	Paint		22.1	
3.9	gb1	2	1.500		1.250	17.000	Plate	A709 GR. 50 OR 50W	Metalize		9.0	
3.10	sg1	2	11 GA.		1.000	16.760	Plate	A240 T304, #8 & 2B	Plain		0.6	
3.11	pg1	2	0.188		0.750	11.750	GB PTFE	PURE VIRGIN UNFILLED	Plain		0.1	
4	1D	1					VERSIFLEX ELASTOMERIC BEARING				335.1	1104-A^
4.1	eb1	1	2.301		15.000	12.000	Elastomeric Bearing	60+/-5 DURO GR. 3 Neoprene	Plain		19.7	
4.2	es1	4	14 GA.		14.750	11.750	Shim (internal)	A1011 GR. 36	Plain		3.7	
4.3	pf1	1	0.188		13.500	11.750	PTFE	PURE VIRGIN UNFILLED	Plain	DIMPLED & LUBRICATED	2.4	
4.4	sb1	1	1.500		15.000	12.000	Plate	A709 GR. 50 OR 50W	Metalize		71.9	
4.5	sp1	1	1.500		20.000	17.000	Plate	A709 GR. 50 OR 50W	Metalize, Paint		144.6	
4.6	ss1	1	11 GA.		14.500	16.760	Plate	A240 T304, #8 & 2B	Plain		8.3	
4.7	hp4	1				9.188	HP10x42	A709 GR. 36, 50 OR 50W	Paint		31.9	
4.8	tp1	1	0.500		13.000	12.000	Plate	A709 GR. 50 OR 50W	Paint		22.1	
4.9	gb1	2	1.500		1.250	17.000	Plate	A709 GR. 50 OR 50W	Metalize		9.0	
4.10	sg1	2	11 GA.		1.000	16.760	Plate	A240 T304, #8 & 2B	Plain		0.6	
4.11	pg1	2	0.188		0.750	11.750	GB PTFE	PURE VIRGIN UNFILLED	Plain		0.1	
5	1E	1					VERSIFLEX ELASTOMERIC BEARING				327.7	1104-A^
5.1	eb1	1	2.301		15.000	12.000	Elastomeric Bearing	60+/-5 DURO GR. 3 Neoprene	Plain		19.7	
5.2	es1	4	14 GA.		14.750	11.750	Shim (internal)	A1011 GR. 36	Plain		3.7	
5.3	pf1	1	0.188		13.500	11.750	PTFE	PURE VIRGIN UNFILLED	Plain	DIMPLED & LUBRICATED	2.4	
5.4	sb1	1	1.500		15.000	12.000	Plate	A709 GR. 50 OR 50W	Metalize		71.9	
5.5	sp1	1	1.500		20.000	17.000	Plate	A709 GR. 50 OR 50W	Metalize, Paint		144.6	
5.6	ss1	1	11 GA.		14.500	16.760	Plate	A240 T304, #8 & 2B	Plain		8.3	
5.7	hp5	1				7.063	HP10x42	A709 GR. 36, 50 OR 50W	Paint		24.4	
5.8	tp1	1	0.500		13.000	12.000	Plate	A709 GR. 50 OR 50W	Paint		22.1	
5.9	gb1	2	1.500		1.250	17.000	Plate	A709 GR. 50 OR 50W	Metalize		9.0	
5.10	sg1	2	11 GA.		1.000	16.760	Plate	A240 T304, #8 & 2B	Plain		0.6	
5.11	pg1	2	0.188		0.750	11.750	GB PTFE	PURE VIRGIN UNFILLED	Plain		0.1	
6	1F	1					VERSIFLEX ELASTOMERIC BEARING				327.7	1104-A^
6.1	eb1	1	2.301		15.000	12.000	Elastomeric Bearing	60+/-5 DURO GR. 3 Neoprene	Plain		19.7	
6.2	es1	4	14 GA.		14.750	11.750	Shim (internal)	A1011 GR. 36	Plain		3.7	
6.3	pf1	1	0.188		13.500	11.750	PTFE	PURE VIRGIN UNFILLED	Plain	DIMPLED & LUBRICATED	2.4	
6.4	sb1	1	1.500		15.000	12.000	Plate	A709 GR. 50 OR 50W	Metalize		71.9	
6.5	sp1	1	1.500		20.000	17.000	Plate	A709 GR. 50 OR 50W	Metalize, Paint		144.6	
6.6	ss1	1	11 GA.		14.500	16.760	Plate	A240 T304, #8 & 2B	Plain		8.3	
6.7	hp6	1				7.188	HP10x42	A709 GR. 36, 50 OR 50W	Paint		24.4	
6.8	tp1	1	0.500		13.000	12.000	Plate	A709 GR. 50 OR 50W	Paint		22.1	
6.9	gb1	2	1.500		1.250	17.000	Plate	A709 GR. 50 OR 50W	Metalize		9.0	
6.10	sg1	2	11 GA.		1.000	16.760	Plate	A240 T304, #8 & 2B	Plain		0.6	
6.11	pg1	2	0.188		0.750	11.750	GB PTFE	PURE VIRGIN UNFILLED	Plain		0.1	

NO.	MK	QTY.	Thick	Dia.	Width	Length	Part	Material	Coating	Remarks	WT	Oracle Seed
7	1G	1					VERSIFLEX ELASTOMERIC BEARING				337.7	1104-A^
7.1	eb1	1	2.301		15.000	12.000	Elastomeric Bearing	60+/-5 DURO GR. 3 Neoprene	Plain		19.7	
7.2	es1	4	14 GA.		14.750	11.750	Shim (internal)	A1011 GR. 36	Plain		3.7	
7.3	pf1	1	0.188		13.500	11.750	PTFE	PURE VIRGIN UNFILLED	Plain	DIMPLED & LUBRICATED	2.4	
7.4	sb1	1	1.500		15.000	12.000	Plate	A709 GR. 50 OR 50W	Metalize		71.9	
7.5	sp1	1	1.500		20.000	17.000	Plate	A709 GR. 50 OR 50W	Metalize, Paint		144.6	
7.6	ss1	1	11 GA.		14.500	16.760	Plate	A240 T304, #8 & 2B	Plain		8.3	
7.7	hp7	1				10.062	HP10x42	A709 GR. 36, 50 OR 50W	Paint		34.5	
7.8	tp1	1	0.500		13.000	12.000	Plate	A709 GR. 50 OR 50W	Paint		22.1	
7.9	gb1	2	1.500		1.250	17.000	Plate	A709 GR. 50 OR 50W	Metalize		9.0	
7.10	sg1	2	11 GA.		1.000	16.760	Plate	A240 T304, #8 & 2B	Plain		0.6	
7.11	pg1	2	0.188		0.750	11.750	GB PTFE	PURE VIRGIN UNFILLED	Plain		0.1	
8	1H	1					VERSIFLEX ELASTOMERIC BEARING				345.0	1104-A^
8.1	eb1	1	2.301		15.000	12.000	Elastomeric Bearing	60+/-5 DURO GR. 3 Neoprene	Plain		19.7	
8.2	es1	4	14 GA.		14.750	11.750	Shim (internal)	A1011 GR. 36	Plain		3.7	
8.3	pf1	1	0.188		13.500	11.750	PTFE	PURE VIRGIN UNFILLED	Plain	DIMPLED & LUBRICATED	2.4	
8.4	sb1	1	1.500		15.000	12.000	Plate	A709 GR. 50 OR 50W	Metalize		71.9	
8.5	sp1	1	1.500		20.000	17.000	Plate	A709 GR. 50 OR 50W	Metalize, Paint		144.6	
8.6	ss1	1	11 GA.		14.500	16.760	Plate	A240 T304, #8 & 2B	Plain		8.3	
8.7	hp8	1				12.125	HP10x42	A709 GR. 36, 50 OR 50W	Paint		41.7	
8.8	tp1	1	0.500		13.000	12.000	Plate	A709 GR. 50 OR 50W	Paint		22.1	
8.9	gb1	2	1.500		1.250	17.000	Plate	A709 GR. 50 OR 50W	Metalize		9.0	
8.10	sg1	2	11 GA.		1.000	16.760	Plate	A240 T304, #8 & 2B	Plain		0.6	
8.11	pg1	2	0.188		0.750	11.750	GB PTFE	PURE VIRGIN UNFILLED	Plain		0.1	
9	1J	1					VERSIFLEX ELASTOMERIC BEARING				342.1	1104-A^
9.1	eb1	1	2.301		15.000	12.000	Elastomeric Bearing	60+/-5 DURO GR. 3 Neoprene	Plain		19.7	
9.2	es1	4	14 GA.		14.750	11.750	Shim (internal)	A1011 GR. 36	Plain		3.7	
9.3	pf1	1	0.188		13.500	11.750	PTFE	PURE VIRGIN UNFILLED	Plain	DIMPLED & LUBRICATED	2.4	
9.4	sb1	1	1.500		15.000	12.000	Plate	A709 GR. 50 OR 50W	Metalize		71.9	
9.5	sp1	1	1.500		20.000	17.000	Plate	A709 GR. 50 OR 50W	Metalize, Paint		144.6	
9.6	ss1	1	11 GA.		14.500	16.760	Plate	A240 T304, #8 & 2B	Plain		8.3	
9.7	hp9	1				11.312	HP10x42	A709 GR. 36, 50 OR 50W	Paint		38.9	
9.8	tp1	1	0.500		13.000	12.000	Plate	A709 GR. 50 OR 50W	Paint		22.1	
9.9	gb1	2	1.500		1.250	17.000	Plate	A709 GR. 50 OR 50W	Metalize		9.0	
9.10	sg1	2	11 GA.		1.000	16.760	Plate	A240 T304, #8 & 2B	Plain		0.6	
9.11	pg1	2	0.188		0.750	11.750	GB PTFE	PURE VIRGIN UNFILLED	Plain		0.1	
10	1K	1					VERSIFLEX ELASTOMERIC BEARING				339.2	1104-A^
10.1	eb1	1	2.301		15.000	12.000	Elastomeric Bearing	60+/-5 DURO GR. 3 Neoprene	Plain		19.7	
10.2	es1	4	14 GA.		14.750	11.750	Shim (internal)	A1011 GR. 36	Plain		3.7	
10.3	pf1	1	0.188		13.500	11.750	PTFE	PURE VIRGIN UNFILLED	Plain	DIMPLED & LUBRICATED	2.4	
10.4	sb1	1	1.500		15.000	12.000	Plate	A709 GR. 50 OR 50W	Metalize		71.9	
10.5	sp1	1	1.500		20.000	17.000	Plate	A709 GR. 50 OR 50W	Metalize, Paint		144.6	
10.6	ss1	1	11 GA.		14.500	16.760	Plate	A240 T304, #8 & 2B	Plain		8.3	
10.7	hp10	1				10.438	HP10x42	A709 GR. 36, 50 OR 50W	Paint		35.9	
10.8	tp1	1	0.500		13.000	12.000	Plate	A709 GR. 50 OR 50W	Paint		22.1	
10.9	gb1	2	1.500		1.250	17.000	Plate	A709 GR. 50 OR 50W	Metalize		9.0	
10.10	sg1	2	11 GA.		1.000	16.760	Plate	A240 T304, #8 & 2B	Plain		0.6	
10.11	pg1	2	0.188		0.750	11.750	GB PTFE	PURE VIRGIN UNFILLED	Plain		0.1	
11	1SA	1					VERSIFLEX ELASTOMERIC BEARING			SAMPLES TO JOBSITE	34.4	1103-A^
11.1	eb1	1	2.301		15.000	12.000	Elastomeric Bearing	60+/-5 DURO GR. 3 Neoprene	Plain		19.7	
11.2	es1	4	14 GA.		14.750	11.750	Shim (internal)	A1011 GR. 36	Plain		3.7	

SHOP DRAWING REVIEW

REVIEW IS FOR GENERAL COMPLIANCE WITH CONTRACT DOCUMENTS NO RESPONSIBILITY ASSUMED FOR CORRECTNESS OF DIMENSIONS OR DETAILS

NO EXCEPTIONS TAKEN	X
MAKE CORRECTIONS NOTED	
AMEND & RESUBMIT	
REJECTED – SEE REMARKS	

E.L. ROBINSON ENGINEERING

Date 11-30-18 By DLR

STATE OF OHIO
DAVID F. TRAINI
E-48751
REGISTERED
PROFESSIONAL ENGINEER

David F. Traini

SEE SHEET GN1 FOR GENERAL NOTES.

REV.	DESCRIPTION	DATE	DET.	CKD.
A	REVISED BOM ACCORDING TO REVISIONS ON SHEETS GN1 & 01	11/27/18	JAK	EAK

D.S. BROWN
A GIBRALTAR INDUSTRIES COMPANY
THE D.S. BROWN COMPANY
300 E. CHERRY STREET
NORTH BALTIMORE, OHIO 45872
419.257.3561
FAX: 419.257.0332
WWW.DSBROWN.COM

LOCATION — BRIDGE OVER NORFOLK SOUTHERN RAILROAD
BRIDGE NO. — FRA-CR27-0785
BIN — 15125
—
P.O. NO. — 18-25-DSB
DESIGNER — E.L. ROBINSON ENGINEERING
CUSTOMER — OHIO STRUCTURES, INC.

DESCRIPTION: VERSIFLEX ELASTOMERIC BEARING
FRANKLIN COUNTY, OHIO

SCALE:	DRAWN BY:	CHECKED BY:	DATE:	
N.T.S.	DJA	EAK	11/18	-
PROJECT NUMBER:	PROJECT CODE:	UNITS:	SHEET:	
1056508	1104	INCHES	BM1	

FILE SAVED: 11/28/18 10:40:51 AM

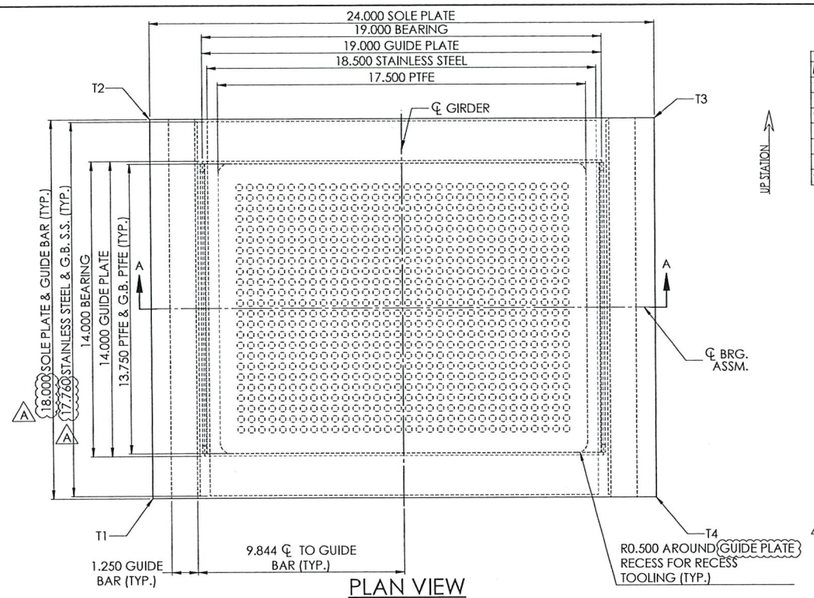

PLAN VIEW

(SEE ASSEMBLY SCHEDULE)

ASSEMBLY SCHEDULE			
MK	LOCATION	QTY.	H
2A	PIER 1, BEAMS 1-3	3	6.528
2B	PIER 1, BEAMS 4-5	2	6.528
2C	PIER 2, BEAMS 1-2	2	6.528
2D	PIER 2, BEAMS 3-5	3	6.528
2E	PIER 3, BEAMS 1-5	5	6.528
2F	PIER 4, BEAMS 1-5	5	6.528
2G	PIER 5, BEAMS 1-5	5	6.528

SOLE PLATE SCHEDULE						
MK	QTY.	T1	T2	T3	T4	CPT
sp2	3	2.000	2.000	2.000	2.000	2.000
sp3	2	1.925	2.075	2.075	1.925	2.000
sp4	2	2.075	1.925	1.925	2.075	2.000
sp5	3	2.000	2.000	2.000	2.000	2.000
sp6	5	2.150	1.850	1.850	2.150	2.000
sp7	5	2.225	1.775	1.775	2.225	2.000
sp8	5	2.300	1.700	1.700	2.300	2.000

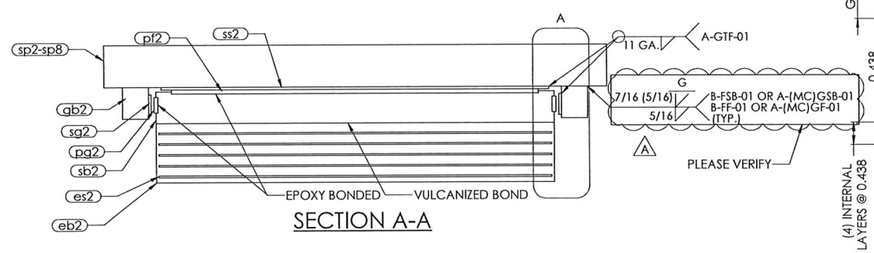

SECTION A-A

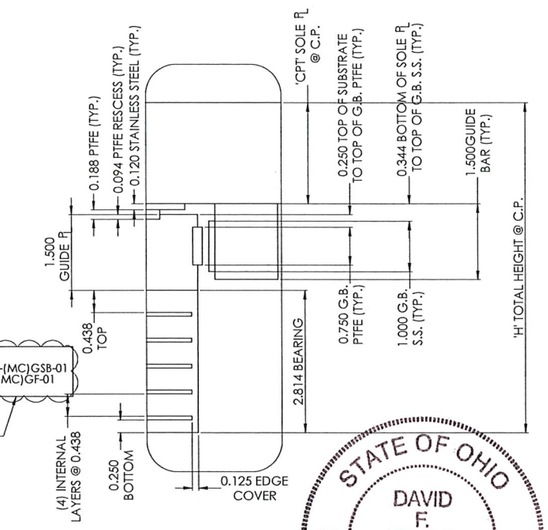

DETAIL A

STATE OF OHIO
DAVID F. TRAINI
E-48751
REGISTERED
PROFESSIONAL ENGINEER

David F. Traini
11-30-18

A NOTE: DS BROWN RESERVES THE RIGHT TO MACHINE THE GUIDE BARS AND SOLE PLATE OUT OF ONE PIECE OF STEEL IN LIEU OF WELDING THE GUIDE BARS TO THE SOLE PLATE. IF THE GUIDE BARS ARE MADE INTEGRAL, THE GUIDE BAR DIMENSIONS WILL EXTEND TO THE OUTSIDE EDGE OF THE SOLE PLATE.

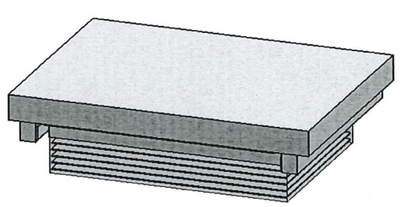

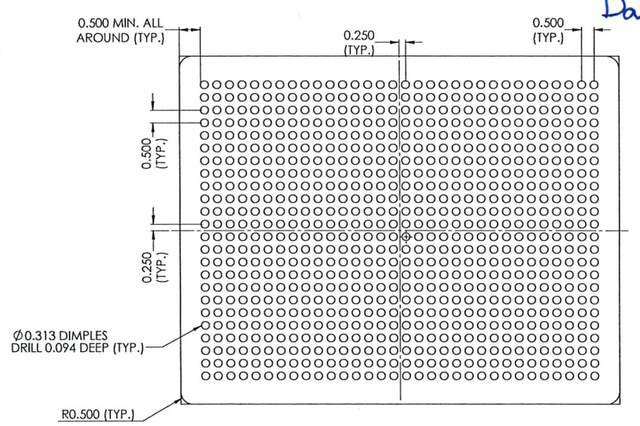

PTFE DIMPLE DETAIL

NOTE (768)-Ø0.313" DIMPLES SHALL BE UNIFORMLY DISTRIBUTED WITHIN THE AREA NOT LESS THAN 0.500" FROM THE EDGE AND OCCUPY BETWEEN 20% & 30% OF THE PTFE AREA

NO.	MK	QTY.	Thick	Dia.	Width	Length	Part	Material	Coating	Remarks	WT	Oracle Seed
1	2A	3					VERSIFLEX ELASTOMERIC BEARING				449.6	1104-B^
1.1	eb2	1	2.814		19.000	14.000	Elastomeric Bearing	60+/-5 DURO GR. 3 Neoprene	Plain		35.6	
1.2	es2	5	14 GA.		18.750	13.750	Shim (internal)	A1011 GR. 36	Plain		5.5	
1.3	pf2	1	0.188		17.500	13.750	PTFE	PURE VIRGIN UNFILLED	Plain	DIMPLED & LUBRICATED	3.6	
1.4	sb2	1	1.500		19.000	14.000	Plate	A709 GR. 50 OR 50W	Metalize		106.2	
1.5	sp2	1	2.000		24.000	18.000	Plate	A709 GR. 50 OR 50W	Metalize		245.0	
1.6	ss2	1	11 GA.		18.500	17.760	Plate	A240 T304, #8 & 2B	Plain		11.2	
1.7	gb2	2	1.500		1.250	18.000	Plate	A709 GR. 50 OR 50W	Metalize		9.6	
1.8	sg2	2	11 GA.		1.000	17.760	Plate	A240 T304, #8 & 2B	Plain		0.6	
1.9	pg2	2	0.188		0.750	13.750	GB PTFE	PURE VIRGIN UNFILLED	Plain		0.2	
2	2B	2					VERSIFLEX ELASTOMERIC BEARING				449.6	1104-B^
2.1	eb2	1	2.814		19.000	14.000	Elastomeric Bearing	60+/-5 DURO GR. 3 Neoprene	Plain		35.6	
2.2	es2	5	14 GA.		18.750	13.750	Shim (internal)	A1011 GR. 36	Plain		5.5	
2.3	pf2	1	0.188		17.500	13.750	PTFE	PURE VIRGIN UNFILLED	Plain	DIMPLED & LUBRICATED	3.6	
2.4	sb2	1	1.500		19.000	14.000	Plate	A709 GR. 50 OR 50W	Metalize		106.2	
2.5	sp3	1	2.075		24.000	18.000	Plate	A709 GR. 50 OR 50W	Metalize, Paint		245.0	
2.6	ss2	1	11 GA.		18.500	17.760	Plate	A240 T304, #8 & 2B	Plain		11.2	
2.7	gb2	2	1.500		1.250	18.000	Plate	A709 GR. 50 OR 50W	Metalize		9.6	
2.8	sg2	2	11 GA.		1.000	17.760	Plate	A240 T304, #8 & 2B	Plain		0.6	
2.9	pg2	2	0.188		0.750	13.750	GB PTFE	PURE VIRGIN UNFILLED	Plain		0.2	
3	2C	2					VERSIFLEX ELASTOMERIC BEARING				449.6	1104-B^
3.1	eb2	1	2.814		19.000	14.000	Elastomeric Bearing	60+/-5 DURO GR. 3 Neoprene	Plain		35.6	
3.2	es2	5	14 GA.		18.750	13.750	Shim (internal)	A1011 GR. 36	Plain		5.5	
3.3	pf2	1	0.188		17.500	13.750	PTFE	PURE VIRGIN UNFILLED	Plain	DIMPLED & LUBRICATED	3.6	
3.4	sb2	1	1.500		19.000	14.000	Plate	A709 GR. 50 OR 50W	Metalize		106.2	
3.5	sp4	1	2.075		24.000	18.000	Plate	A709 GR. 50 OR 50W	Metalize, Paint		245.0	
3.6	ss2	1	11 GA.		18.500	17.760	Plate	A240 T304, #8 & 2B	Plain		11.2	
3.7	gb2	2	1.500		1.250	18.000	Plate	A709 GR. 50 OR 50W	Metalize		9.6	
3.8	sg2	2	11 GA.		1.000	17.760	Plate	A240 T304, #8 & 2B	Plain		0.6	
3.9	pg2	2	0.188		0.750	13.750	GB PTFE	PURE VIRGIN UNFILLED	Plain		0.2	
4	2D	3					VERSIFLEX ELASTOMERIC BEARING				449.6	1104-B^
4.1	eb2	1	2.814		19.000	14.000	Elastomeric Bearing	60+/-5 DURO GR. 3 Neoprene	Plain		35.6	
4.2	es2	5	14 GA.		18.750	13.750	Shim (internal)	A1011 GR. 36	Plain		5.5	
4.3	pf2	1	0.188		17.500	13.750	PTFE	PURE VIRGIN UNFILLED	Plain	DIMPLED & LUBRICATED	3.6	
4.4	sb2	1	1.500		19.000	14.000	Plate	A709 GR. 50 OR 50W	Metalize		106.2	
4.5	sp5	1	2.000		24.000	18.000	Plate	A709 GR. 50 OR 50W	Metalize, Paint		245.0	
4.6	ss2	1	11 GA.		18.500	17.760	Plate	A240 T304, #8 & 2B	Plain		11.2	
4.7	gb2	2	1.500		1.250	18.000	Plate	A709 GR. 50 OR 50W	Metalize		9.6	
4.8	sg2	2	11 GA.		1.000	17.760	Plate	A240 T304, #8 & 2B	Plain		0.6	
4.9	pg2	2	0.188		0.750	13.750	GB PTFE	PURE VIRGIN UNFILLED	Plain		0.2	
5	2E	5					VERSIFLEX ELASTOMERIC BEARING				449.6	1104-B^
5.1	eb2	1	2.814		19.000	14.000	Elastomeric Bearing	60+/-5 DURO GR. 3 Neoprene	Plain		35.6	
5.2	es2	5	14 GA.		18.750	13.750	Shim (internal)	A1011 GR. 36	Plain		5.5	
5.3	pf2	1	0.188		17.500	13.750	PTFE	PURE VIRGIN UNFILLED	Plain	DIMPLED & LUBRICATED	3.6	
5.4	sb2	1	1.500		19.000	14.000	Plate	A709 GR. 50 OR 50W	Metalize		106.2	
5.5	sp6	1	2.150		24.000	18.000	Plate	A709 GR. 50 OR 50W	Metalize, Paint		245.0	
5.6	ss2	1	11 GA.		18.500	17.760	Plate	A240 T304, #8 & 2B	Plain		11.2	
5.7	gb2	2	1.500		1.250	18.000	Plate	A709 GR. 50 OR 50W	Metalize		9.6	
5.8	sg2	2	11 GA.		1.000	17.760	Plate	A240 T304, #8 & 2B	Plain		0.6	
5.9	pg2	2	0.188		0.750	13.750	GB PTFE	PURE VIRGIN UNFILLED	Plain		0.2	
6	2F	5					VERSIFLEX ELASTOMERIC BEARING				449.6	1104-B^
6.1	eb2	1	2.814		19.000	14.000	Elastomeric Bearing	60+/-5 DURO GR. 3 Neoprene	Plain		35.6	
6.2	es2	5	14 GA.		18.750	13.750	Shim (internal)	A1011 GR. 36	Plain		5.5	
6.3	pf2	1	0.188		17.500	13.750	PTFE	PURE VIRGIN UNFILLED	Plain	DIMPLED & LUBRICATED	3.6	
6.4	sb2	1	1.500		19.000	14.000	Plate	A709 GR. 50 OR 50W	Metalize		106.2	
6.5	sp7	1	2.225		24.000	18.000	Plate	A709 GR. 50 OR 50W	Metalize, Paint		245.0	
6.6	ss2	1	11 GA.		18.500	17.760	Plate	A240 T304, #8 & 2B	Plain		11.2	
6.7	gb2	2	1.500		1.250	18.000	Plate	A709 GR. 50 OR 50W	Metalize		9.6	
6.8	sg2	2	11 GA.		1.000	17.760	Plate	A240 T304, #8 & 2B	Plain		0.6	
6.9	pg2	2	0.188		0.750	13.750	GB PTFE	PURE VIRGIN UNFILLED	Plain		0.2	
7	2G	5					VERSIFLEX ELASTOMERIC BEARING				449.6	1104-B^
7.1	eb2	1	2.814		19.000	14.000	Elastomeric Bearing	60+/-5 DURO GR. 3 Neoprene	Plain		35.6	
7.2	es2	5	14 GA.		18.750	13.750	Shim (internal)	A1011 GR. 36	Plain		5.5	
7.3	pf2	1	0.188		17.500	13.750	PTFE	PURE VIRGIN UNFILLED	Plain	DIMPLED & LUBRICATED	3.6	
7.4	sb2	1	1.500		19.000	14.000	Plate	A709 GR. 50 OR 50W	Metalize		106.2	
7.5	sp8	1	2.300		24.000	18.000	Plate	A709 GR. 50 OR 50W	Metalize, Paint		245.0	
7.6	ss2	1	11 GA.		18.500	17.760	Plate	A240 T304, #8 & 2B	Plain		11.2	
7.7	gb2	2	1.500		1.250	18.000	Plate	A709 GR. 50 OR 50W	Metalize		9.6	
7.8	sg2	2	11 GA.		1.000	17.760	Plate	A240 T304, #8 & 2B	Plain		0.6	
7.9	pg2	2	0.188		0.750	13.750	GB PTFE	PURE VIRGIN UNFILLED	Plain		0.2	

SHOP DRAWING REVIEW

REVIEW IS FOR GENERAL COMPLIANCE WITH CONTRACT DOCUMENTS NO RESPONSIBILITY ASSUMED FOR CORRECTNESS OF DIMENSIONS OR DETAILS

NO EXCEPTIONS TAKEN	X
MAKE CORRECTIONS NOTED	
AMEND & RESUBMIT	
REJECTED – SEE REMARKS	

E.L. ROBINSON ENGINEERING

Date 11-30-18 By Dal Zi

D.S. BROWN
A GIBRALTAR INDUSTRIES COMPANY
THE D.S. BROWN COMPANY
300 E. CHERRY STREET
NORTH BALTIMORE, OHIO 45872
419.257.3561
FAX: 419.257.0332
WWW.DSBROWN.COM

SEE SHEET GN1 FOR GENERAL NOTES.

VERTICAL LOADS (KIPS)		
DL	LL	MAX. DESIGN LOAD (DL+LL)
188.0	139.0	327.0

REV.	DESCRIPTION	DATE	DET.	CKD.
A	REVISED SOLE PLATE, GUIDE BAR, STAINLESS STEEL DIMENSIONS, NOTES & LABLES	11/27/18	JAK	EAK

LOCATION — BRIDGE FRA-CR27-0785 OVER NORFOLK SOUTHERN RAILROAD
BRIDGE NO.STRUCTURE — FRA-CR270785
PID NO. — 15125
—
P.O. NO. — 18-25-DSB
DESIGNER — E.L. ROBINSON ENGINEERING
CUSTOMER — OHIO STRUCTURES, INC.

DESCRIPTION: VERSIFLEX ELASTOMERIC BEARING FRANKLIN COUNTY, OHIO

SCALE:	DRAWN BY:	CHECKED BY:	DATE:	
N.T.S.	DJA	EAK	11/9/18	-
PROJECT NUMBER:	PROJECT CODE:	UNITS:	SHEET:	
1056508	1104	INCHES	02	

FILE SAVED: 11/28/18 11:01:15 AM